CAD GENERATED DRAWING - NO PENCIL CHANGES ALLOWED

PART No.	BODY	BODY STYLE	FUSE PROVIDED	FUSE RATING	REMARKS
0FNY0001Z	0FNY0001Z	1	NONE	----	NOTE 1
0FNY0004Z	0FNY0001Z	1	0307004.Z	4 AMP	NOTE 1
0FNY0006Z	0FNY0001Z	1	0307006.Z	6 AMP	NOTE 1
~~0FNY0075Z~~	~~0FNY0001Z~~	~~1~~	~~030707.5Z~~	~~7.5 AMP~~	~~NOTE 1~~ OBS.
~~0FNY0009Z~~	~~0FNY0001Z~~	~~1~~	~~0307009.Z~~	~~9 AMP~~	~~NOTE 1~~ OBS.
0FNY0014Z	0FNY0001Z	1	0307014.Z	14 AMP	NOTE 1
0FNY0020Z	0FNY0001Z	1	0307020.Z	20 AMP	NOTE 1
0FNY0030Z	0FNY0030Z	2	0307030.Z	30 AMP	NOTE 2

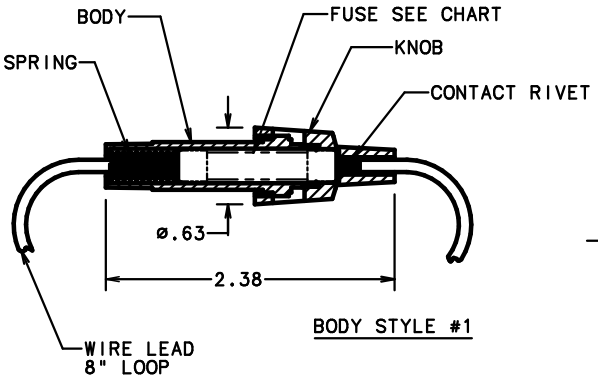

BODY STYLE #1

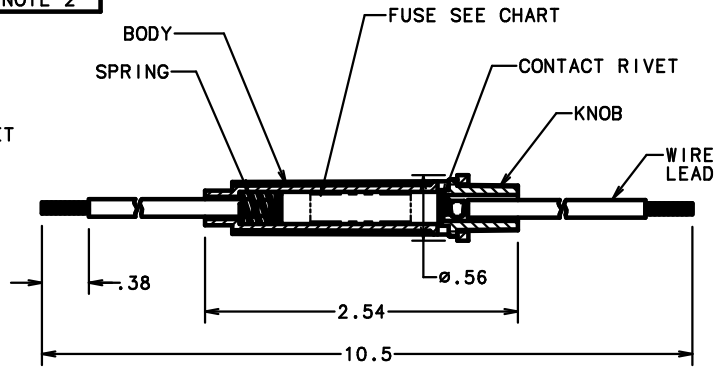

BODY STYLE #2

NOTES:
1. FOR 0FNY0001:
   A) MAX. RATING: 20 AMPS, 32 VOLTS AT A MAXIMUM OPERATING TEMPERATURE OF 180° F (82° C).
   B) BODY MATERIAL: NYLON 6/6, BLACK
      KNOB MATERIAL: NYLON 6/6, BLACK
      SPRING MATERIAL: COATED STEEL
      CONTACT RIVET MATERIAL: BRASS
      WIRE LEAD MATERIAL: #14 GAUGE, STRANDED, BLACK
   C) FUSEHOLDER IS SHIPPED WITH KNOB AND BODY ASSEMBLED (FUSE INSTALLED, IF REQUIRED) FORMING A LOOP.

2. FOR 0FNY0030:
   A) MAX. RATING: 30 AMPS, 32 VOLTS AT A MAXIMUM OPERATING TEMPERATURE OF 180° F (82° C).
   B) BODY MATERIAL: NYLON, WHITE TRANSLUCENT
      KNOB MATERIAL: NYLON 6/6, BLACK
      SPRING MATERIAL: COATED STEEL
      CONTACT RIVET MATERIAL: BRASS
      WIRE LEAD MATERIAL: #12 GAUGE, STRANDED, ORANGE PVC, G.P. SAE TYPE 1
   C) FUSEHOLDER IS SHIPPED WITH KNOB AND BODY ASSEMBLED (FUSE INSTALLED).

GENERAL NOTES:
1. TOTAL WEIGHT OF SHIPPING CARTON SHALL BE LIMITED TO 50 LBS. MAX.

UNLESS OTHERWISE SPECIFIED, DIMENSIONS DO NOT INCLUDE PLATING.
CR DENOTES CRITICAL CHARACTERISTICS.
CPK DENOTES CPK DIMENSIONS,-MINIMUM CPK VALUE
ST DENOTES A CHARACTERISTIC THAT PROVIDES AN INDICATION OF PROCESS PERFORMANCE. PROCEDURE FOR MEASUREMENT AND TRACKING TO BE DEFINED IN LITTELFUSE INSPECTION INSTRUCTIONS.
CP DENOTES CP DIMENSIONS,-MINIMUM CP VALUE TO BE WITHIN THE DIMENSIONAL LIMITATIONS SHOWN ON DRAWING AND INITIALLY LOCATED TO AIM FOR MAXIMUM TOOL LIFE.

NO	COMPONENT NO	DESCRIPTION	QTY/M	U/M

BILL OF MATERIAL

MATL SPEC | FINISH

COPIES TO			
1	9	18	
2	10	19	
3	12	20	
4	13	21	
5	14	23	
6	15	33	
7	16	43	
8	17	53	

	DATE	SCALE 1=1
DRW JMB	2/11/99	
CHK	DATE	SUPER DRW
APPD	DATE	RAW STK WT LBS/M

TOLERANCE UNLESS OTHERWISE SPECIFIED
TWO PLACE DEC ±.01 FRACTION ±
THREE PLACE DEC ±.005 ANGULAR ±1°

TITLE FUSEHOLDER, INLINE (FUSE OPTIONAL)

Littelfuse DES PLAINES, ILLINOIS 60016

REVISION G | DWG. NO. SERIES OUTLINE 0FNY0000Z

LTR	REVISION	CHK	APD
F	39728C- REVISE & REDRAWN ON NEW FORMAT 2/26/99 JMB		
G	82904C - OBS. 0FNY0075Z, 0FNY0009Z		
-	3/21/03 BJJ		

UNCONTROLLED DOCUMENT