CAD GENERATED DRAWING - NO PENCIL CHANGES ALLOWED

PART NUMBER	COVER OPENINGS
04980916ZXT	A D

MATERIAL:
*BODY - GLASS FILLED THERMOPLASTIC: COLOR-BLACK
*COVER - THERMOPLASTIC: COLOR-BLACK
*HARDWARE - 5M THREADED STUDS & NUTS AND STEEL LOCKWASHER WITH ZINC AND TRIVALENT CHROMATE, LEACHED AND SEALED, INTEGRAL TORQUE CONTROL LUBRICANT FINISH (MEETS ASTM STANDARD B-117, 96 HR. SALT SPRAY REQUIREMENTS).

04980902ZXT:
*HARDWARE - 5M THREADED STUDS & NUTS WITH INTEGRAL LOCKWASHER WITH ZINC AND TRIVALENT CHROMATE, LEACHED AND SEALED, INTEGRAL TORQUE CONTROL LUBRICANT FINISH (MEETS ASTM STANDARD B-117, 96 HR. SALT SPRAY REQUIREMENTS).

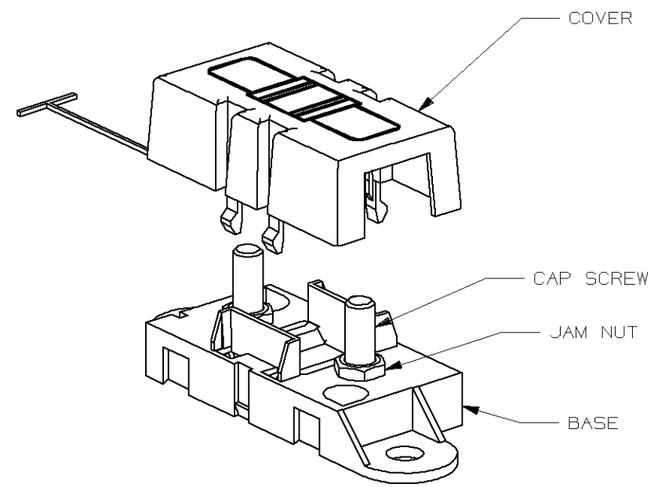

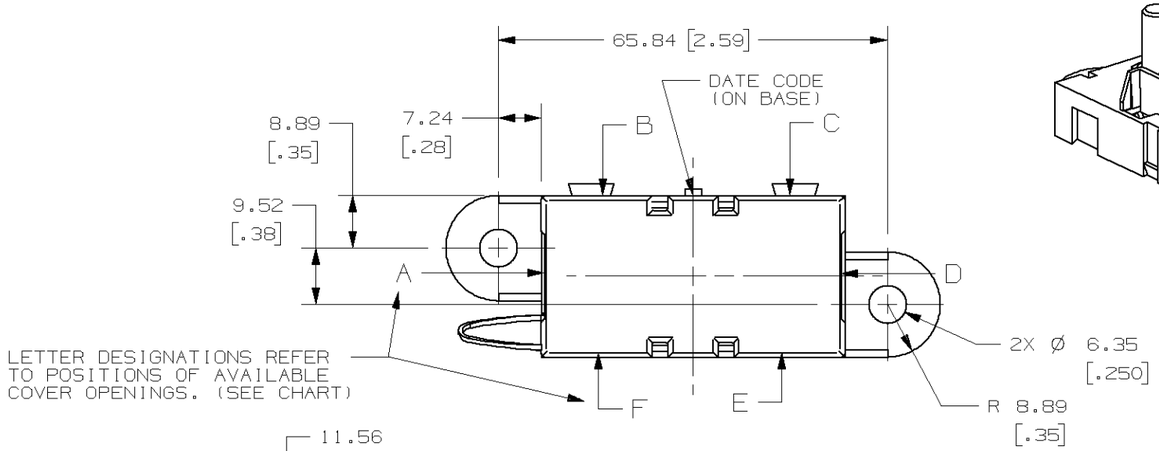

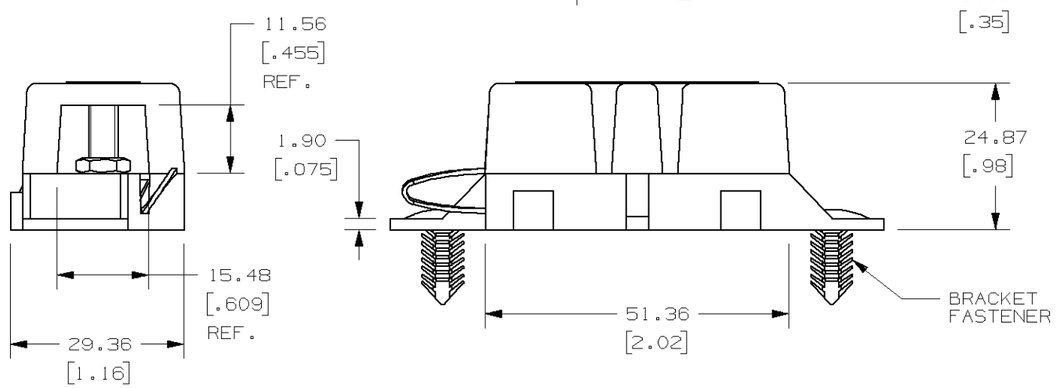

NOTES:

1. TAB COVER TIE IS INSERTED INTO HOLE IN BASE.
2. TORQUE REQUIRED FOR TOP NUT (NOT SHOWN) TO BE 4.0 - 5.0 NEWTON METERS (35-44 IN-LBS).
3. CAP SCREW AND JAM NUT - M5 X 0.8 STEEL, ZINC PLATE WITH TRIVALENT CHROMATE, LEACHED AND SEALED, INTEGRAL TORQUE CONTROL LUBRICANT FINISH. (MEETS 96 HR. ASTM STD. B-117 SALT SPRAY REQ.).
4. HOLDER MEETS L/F VALIDATION TEST SPEC. VS-005004.

METRIC

NO	COMPONENT NO	DESCRIPTION	QTY/M	U/M
		BILL OF MATERIAL		

MATL SPEC
FINISH

DRW	GMB	DATE	09/25/07
CHK		DATE	
APPD		DATE	

SCALE 1:1
SUPER DR
FINSH GOOD WT GRAMS/PIECE

TOLERANCE UNLESS OTHERWISE SPECIFIED
ONE PLACE DEC +/-.25 TWO PLACE DEC +/-.13 THREE PLACE DEC +/-.100 ANGULAR +/-1°

COPIES TO: 1 9 18 / 2 10 19 / 3 12 20 / 4 13 21 / 5 14 23 / 6 15 33 / 7 16 43 / 8 17 53

TITLE: MIDIFUSE HOLDER

3RD ANGLE PROJECTION

Littelfuse® DES PLAINES, ILLINOIS 60016

OUTLINE
DRWG. NO. 04980916ZXT
REVISION B

LTR	DATE	REVISION	CHK	APD
A	09/25/07	000164ER - RELEASED GMB		
B	02/13/08	000476EC/D-ADD MATERIAL DATA NOTE GMB		

UNLESS OTHERWISE SPECIFIED, DIMENSIONS ARE IN MILLIMETERS.
DIMENSIONS IN BRACKETS [ ] ARE INCHES
UNLESS OTHERWISE SPECIFIED, DIMENSIONS DO NOT INCLUDE PLATING.

◎ DENOTES CRITICAL CHARACTERISTICS.
CPK DENOTES CPK DIMENSIONS, -MINIMUM CPK VALUE
ST DENOTES A CHARACTERISTIC THAT PROVIDES AN INDICATION OF PROCESS PERFORMANCE. PROCEDURE FOR MEASUREMENT AND TRACKING TO BE DEFINED IN LITTELFUSE INSPECTION INSTRUCTIONS
CP DENOTES CP DIMENSIONS, -MINIMUM CP VALUE MUST BE WITHIN THE DIMENSIONAL LIMITATIONS SHOWN ON DRAWING AND INITIALLY LOCATED TO ALLOW FOR MAXIMUM TOOL LIFE