THIS DRAWING AND THE INFORMATION CONTAINED WITHIN IT ARE CONFIDENTIAL AND MAY NOT BE COPIED OR DISCLOSED WITHOUT THE WRITTEN PERMISSION OF LITTELFUSE.

REVISIONS

REV.	DESCRIPTION	DATE	GCF / ECR	DESIGNED	APPROVED
A	First issue of outline drawing	30-Sep-21		L.Dal Molin	M.Tinto

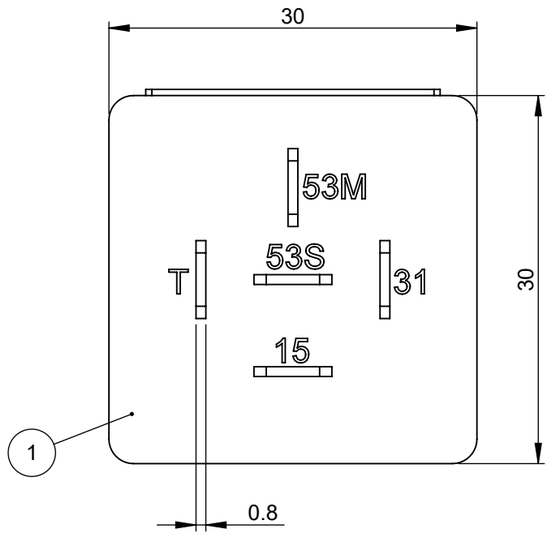

ELECTRICAL DIAGRAM

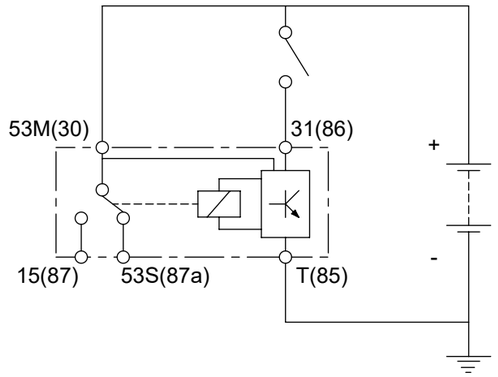

CONTACT ARRANGEMENT

N. contacts	Function
T	85 Negative
31	86 Positive command
15	87 NO Contact
53M	30 Positive (+30)
53S	87a NC Contact

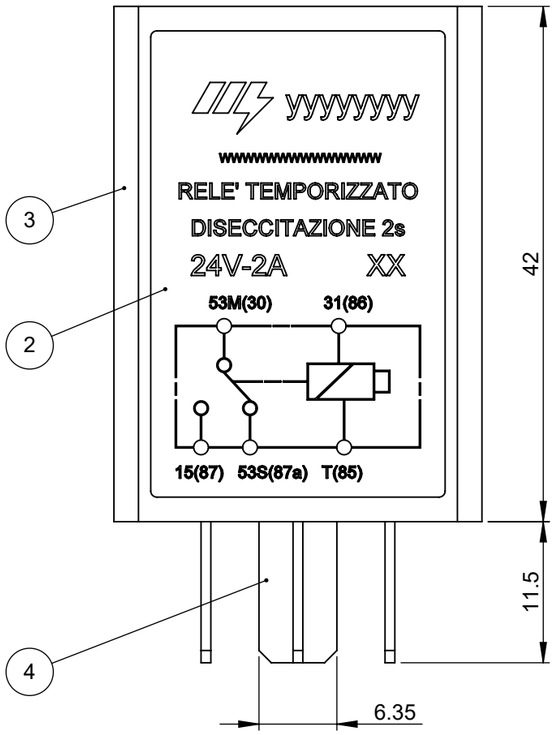

4		Male contact	Brass	5	EA
3		Box	Thermoplastic	1	EA
2		Self-adhesive label		1	EA
1		Top cover	Thermoplastic	1	EA
POS.	p/N	DESCRIPTION	MATERIAL	Q.TY	U/M

PRESCRIPTIONS
The top cover must have only the five male terminals of 6.35 therefore the terminal 2.8, designated with the letter I, must be cut.

Nominal working voltage: 24V continuos voltage
Voltage range: 19.2 ÷ 32 V
Maximum contact current: 5A
Nominal contact current: 2A
Maximum power supply circuit current(30) in ON: 40mA
Maximum power supply circuit current(30) in OFF: 10 mA
Maximum control circuit current (86): 10 mA
Number of electrical operations: 200.000
Number of mechanical operations: 200.000
Delay on de-energization: 2 (±0.3) sec.

SAP drawing number: 10000115053

Material and treatments:

DIMENSIONS AND TOLERANCES IN MILLIMETERS, DEFINED ACCORDING TO ISO 1101-2017.

linear dimensions

0,5 3	>3 6	>6 30	>30 120	>120 400	>400 1000	>1000 2000
±0,2	±0,3	±0,5	±0,8	±1,2	±2	±3

angle (for range of lengths)

up to 10	>10 50	>50 120	>120 400
±1°30'	±1°	±0°30'	±0°15'

●	FIT/ FUNCTION CRITICAL CHARACTERISTICS SYMBOL
<S>	SAFETY/ COMPLIANCE CRITICAL CHARACTERISTICS SYMBOL
CPK	DENOTES CPK DIMENSIONS MINIMUM CPK VALUE
ST	DENOTES A CHARACTERISTIC THAT PROVIDES AN INDICATION OF PROCESS PERFORMANCE.PROCEDURE FOR MEASUREMENTAND TRACKINGTO BE DEFINED IN LITTELFUSE INSPECTION INSTRUCTIONS
CP	DENOTES CP DIMENSIONS, -MINIMUM CP VALUE MUST BE WITHIN THE DIMENSIONAL LIMITATIONS SHOWN ON DRAWING AND INITIALLY LOCATED TO ALLOW FOR MAXIMUM TOOL LIFE

	NAME	DATE
DRAWN	L. Dal Molin	30-Sep-21
CHECKED	-	-
	-	-
	-	-

FORM NO; CVP-PE40-0013 REV A

FIRST ANGLE PROJECTION

DO NOT SCALE DRAWING

Littelfuse
Expertise Applied | Answers Delivered

TITLE
RELAY FOR TIME-DELAYED DEENERG. 2 SEC.

SIZE: A3 | DWG. NO. OUTLINE OL-05930200 | REV. A

SCALE 2:1 | SHEET 1 OF 1