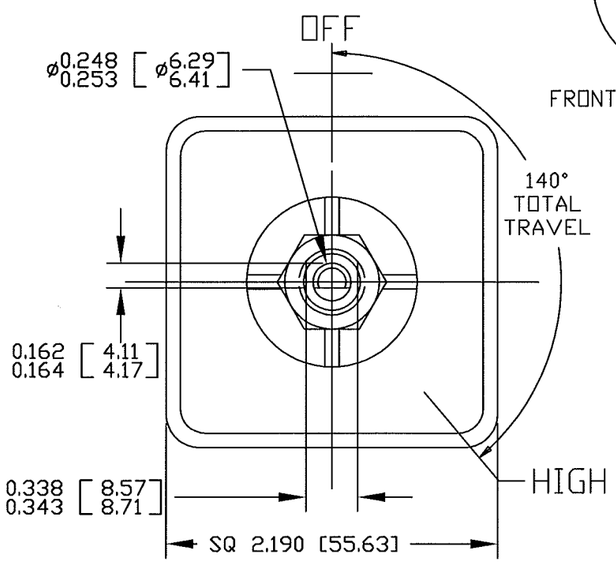

FRONT VIEW OF KNOB

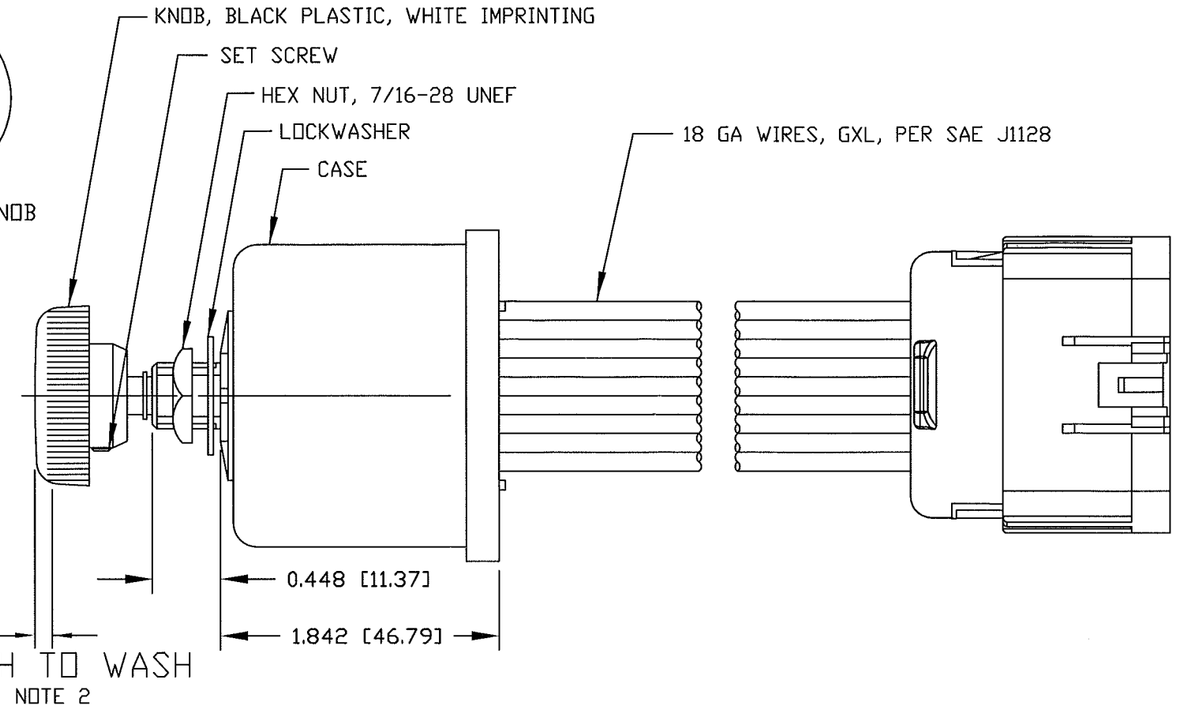

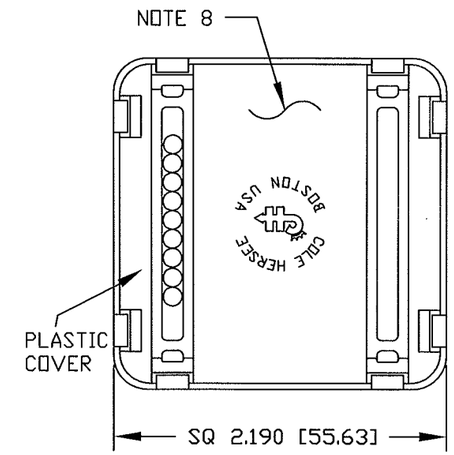

CIRCUITRY

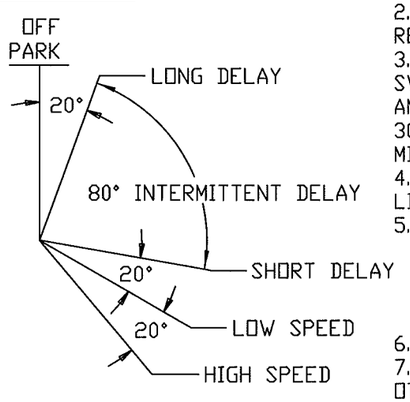

NOTES:

1. DESIGNED FOR 12V SYSTEM, DUAL MOTOR, DYNAMIC AND NON-DYNAMIC PARK.
2. PUSH TO WASH FUNCTION RESULTS IN 3 WIPES AFTER RELEASE OF PUSH SWITCH.
3. RATING: VOLTAGE OPERATING RANGE 9VDC TO 16VDC ROTARY SWITCH ACTUATION 20,000 CYCLES MINIMUM. MOTOR DRIVE: 10 AMPS PER MOTOR CONTINUOUS. START-UP/STALL/LOCKED-ROTOR 30 AMPS. WASHER CIRCUIT 3 AMPS, PUSH SWITCH 20,000 CYCLES MINIMUM.
4. MICROPROCESSOR CONTROLLED, SOLID-STATE RELAY, CURRENT LIMIT SENSE CIRCUIT, REVERSE POLARITY PROTECTED
5. CONFORMS TO SAE J1455:
   - 4.11 GENERAL HEAVY DUTY TRUCK ELECTRICAL ENVIRONMENT.
     - 4.11.1 STEADY-STATE ELECTRICAL CHARACTERISTICS.
     - 4.11.2 TRANSIENT, NOISE AND ELECTROSTATIC CHARACTERISTICS.
6. INTERMITTENT DELAYS: 1, 2, 4, 7, 11 AND 16 SECONDS
7. ALL DIMENSIONS ARE REFERENCE ONLY UNLESS NOTED OTHERWISE.
8. COLE HERSEE PART NUMBER, REVISION, & DATE CODE STAMPED IN WHITE ON REAR PLASTIC COVER.

COLOR	FUNCTION	TERMINAL
YELLOW	LOW-SPEED MOTOR #1	A
RED	VBB (12V POWER)	B
WHITE	HIGH-SPEED MOTOR#1	C
BLUE	PARK MOTOR #1	D
N/C	N/C	E
BROWN	WASHER	F
GREY	HIGH-SPEED MOTOR #2	G
PURPLE	PARK MOTOR #2	H
ORANGE	LOW-SPEED MOTOR #2	J
BLACK	GROUND (0V)	K
N/C	N/C	L
N/C	N/C	M

CONNECTOR VIEW FROM OPEN END

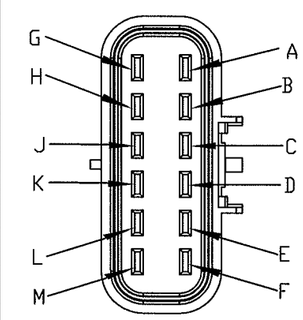

Revision Control Record

Rev.	Description of Change	ECN No.	Date
A	RELEASED DRAWING	12056	02-02-12

Rev.	Description of Change	ECN No.	Date

Tolerances Unless otherwise specifically noted, the following are default tolerances;

2-places	3-places	Angular
+/- 0.02"	+/- 0.005"	+/- 1°

Metric: Shown in [ ] refers to equivalent English Dim Tol

"REF." or an Asterisk (*) = Non-Toleranced Reference Dimension, shown for clarification purposes only.

NOTE: *All tolerances are Non-Cumulative.*

PROPRIETARY INFORMATION
This Engineering Drawing, and the information contained herein, is proprietary to Cole Hersee Company and may not be disclosed, re-produced, or in any other way transferred or communicated to any other party without the express written consent of an authorized representative of Cole Hersee Company.

Special Characteristics:

- (CC) Critical Characteristic, relating to Safety and/or Regulatory Compliance
- [X] Significant Characteristic relating to Process Control
- (KC) Control Dimension relating to Form - Fit - Function as defined by Cole Hersee Company and/or the Customer

Cole Hersee Co.
20 Old Colony Ave., South Boston, MA, 02127
Phn: 617-268-2100 Web: www.colehersee.com

Description: WINDSHIELD WIPER CONTROLLER, DUAL-MOTOR, 12V, SSR

FORM CHT-6 (2/07)	Used On or Ref.: EX28941	Scale: 1:1	Drawn BY: PMV	Date Drawn: 01/23/12	Pg. 1 of 1	Drawing / Part No.: 75600-32	Current Rev. A