CURREN RATE [A]	VERSIONS AND PART NUMBERS	THICKNESS "S" (mm)
30	156.5611.5301	0.25
40	156.5611.5401	0.20
50	156.5611.5501	0.25
60	156.5611.5601	0.40
70	156.5611.5701	0.45
80	156.5611.5801	0.50
100	156.5611.6101	0.70
120	156.5611.6111	0.70
125	156.5611.6121	0.70
150	156.5611.6151	1.0

LTR	DATE	REVISION	DRW
A	01/FEB/23	526176GCA - INITIAL RELEASE	OPL

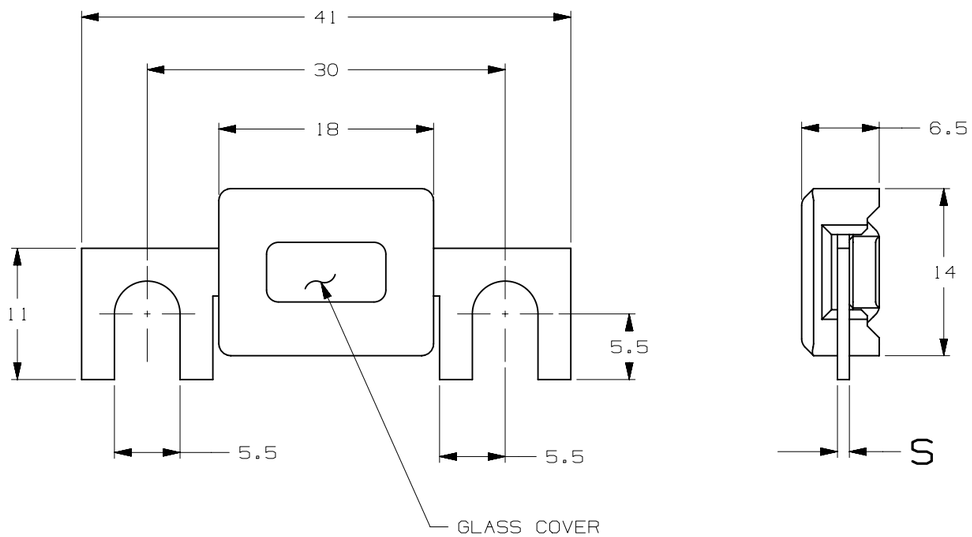

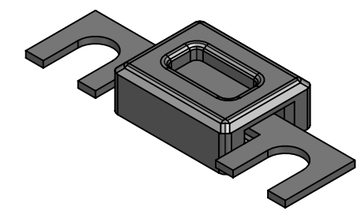

ISOMETRIC VIEW

FUSE STRIPS WITH HOUSING 36V

TERMINAL MATERIAL:	ZINC ALLOY
TERMINAL PLATING:	NONE
HOUSING MATERIAL:	CERAMIC

LINEAR DIMENSIONS					ANGLES	RADII
DIM	.5 - 6	6 - 30	30 - 120	120 - 400	±0.5°	±0.2
TOL	±0.1	±0.2	±0.3	±0.5		

3RD ANGLE PROJECTION

Littelfuse®
CHICAGO, USA 773-628-1000

REVISION: A

DRWG. NO. WEB-156.0000.0000