| MM | IN |
|---|---|
| 25 | 010 |
| 5 58 | 220 |
| 15 74 | .620 |
| 18.03 | 710 |
| 22 60 | 890 |
| 28 44 | 1.120 |
| 31 75 | 1 250 |

5066

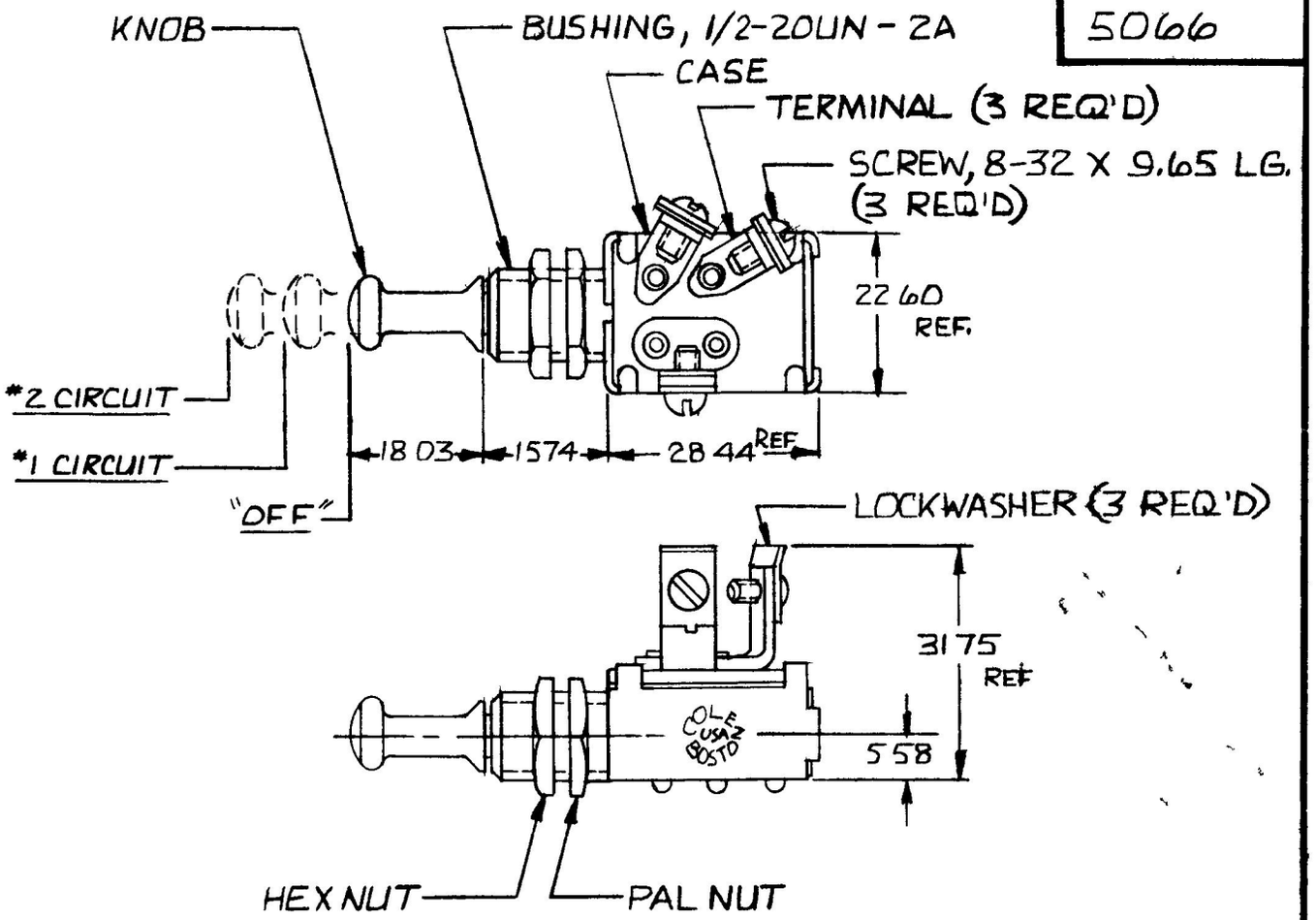


NOTES:

1. 8 AMPS @ 12V DC
2. ALL STEEL PARTS PLATED

METRIC

DO NOT SCALE

| LET | WAS | DATE | BY | LET | WAS | DATE | BY | MATERIAL | DRAWN | CHECKED | APPRV D | SCALE | | DATE DRAWN |
|---|---|---|---|---|---|---|---|---|---|---|---|---|---|---|
| | | | | | | | | — | DS | RA | | 1:1 | | 1-20-48 |
| | | | | | | | | FINISH — | Cole Hersee Co. | | | | | DATE BLUEPRINT |
| | | | | | | | | TOLERANCES DECIMAL ± METRIC ± 25 | PUSH-PULL SWITCH | | | | | 5066 |
| | | | | P | REDRAWN | 12980 | R | | | | | | | |

CH 188(4 78)

Confidential Property of Cole Hersee