THIS DRAWING AND THE INFORMATION CONTAINED WITHIN IT ARE CONFIDENTIAL AND MAY NOT BE COPIED OR DISCLOSED WITHOUT THE WRITTEN PERMISSION OF LITTELFUSE.

REVISIONS

REV.	DESCRIPTION	DATE	DESIGNED	APPROVED
A	FIRST ISSUE OF OUTLINE DRAWING	08-June-20	Gasparini	Tinto

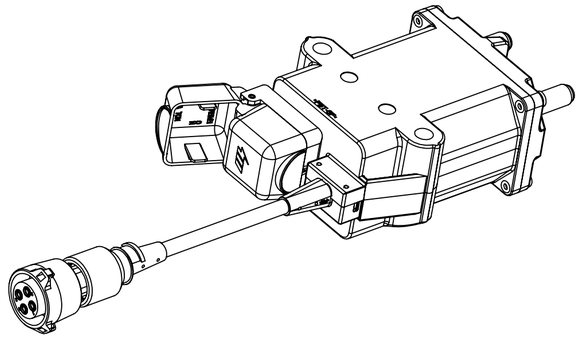

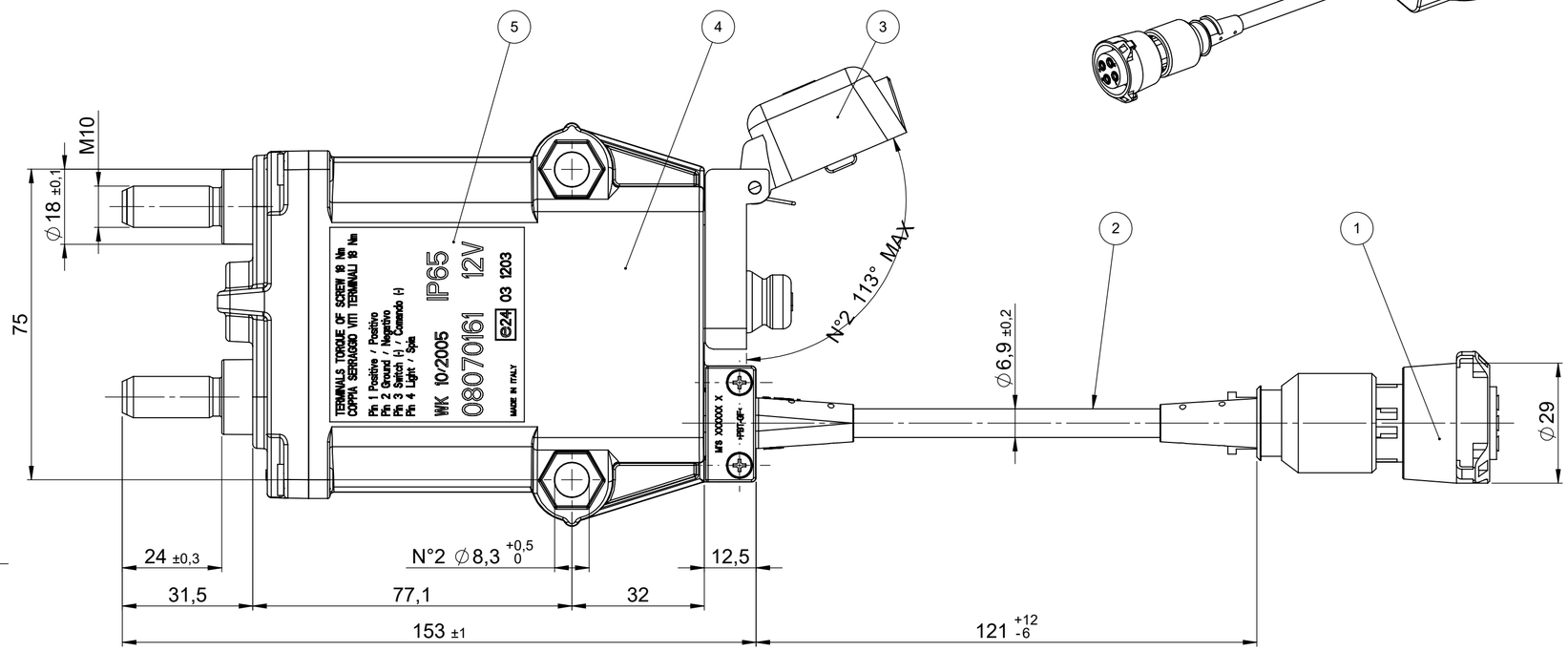

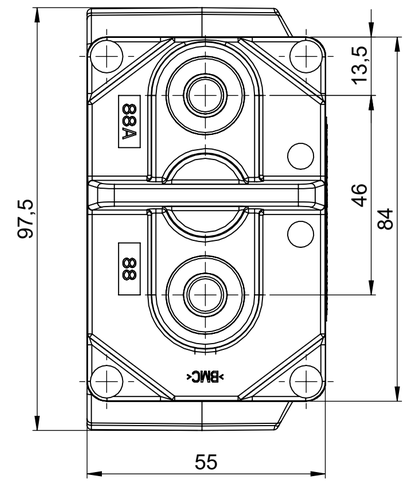

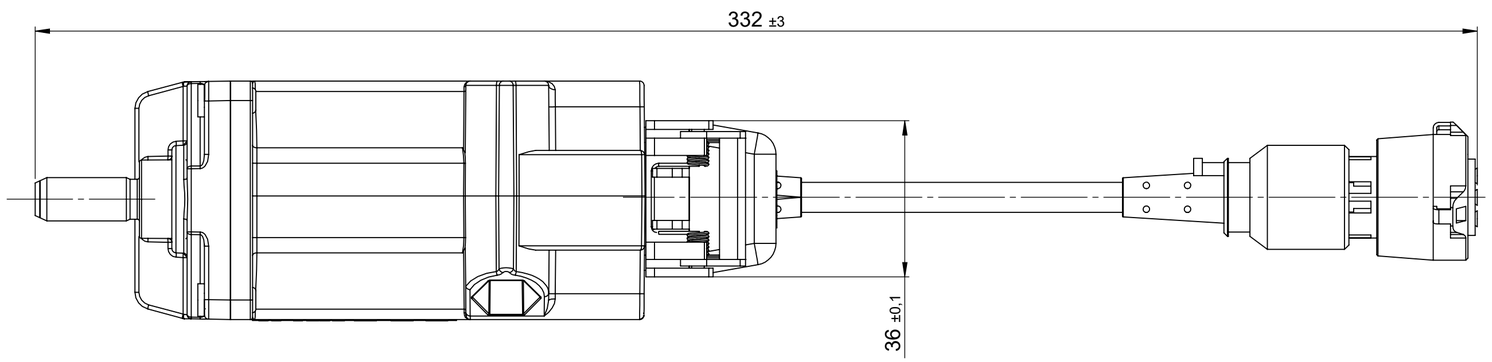

FIXING HOLES

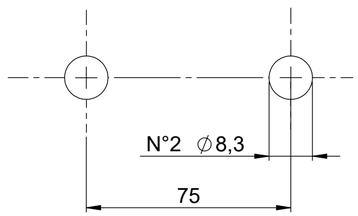

Legend
1) 4-ways plug connector in according to DIN 72585-1:1996 in black thermoplastic PBT
2) 4 ways wiring
3) Cover in PA6
4) Body battery switch
5) Adhesive label showing: week and year of production, part number, component supplier part number and pin-out connections

CHARACTERISTICS AND PRESCRIPTIONS
-Rated voltage 9 ÷ 16V
-Max direct current 300A
-Max short time current 2000A for 5 sec at 23°C

-Mechanical operations cicles 45000 at 23°C
-Delivery conditions: open main contacts
-Tightening torque nuts M10 and washers supplier 18±1 Nm
-Secure the device to the structure using screws M8 with torque 10±2Nm
-It is recommended to connect the device with the mating connector kit 4 way LITTELFUSE

SAP drawing number:

Material and treatments:

DIMENSIONS AND TOLERANCES IN MILLIMETERS, DEFINED ACCORDING TO ISO 1101-2017.

linear dimensions

0,5 3	>3 6	>6 30	>30 120	>120 400	>400 1000	>1000 2000
±0,2	±0,3	±0,5	±0,8	±1,2	±2	±3

angle (for range of lengths)

up to 10	>10 50	>50 120	>120 400
±1°30'	±1°	±0°30'	±0°15'

●	FIT/ FUNCTION CRITICAL CHARACTERISTICS SYMBOL
<S>	SAFETY/ COMPLIANCE CRITICAL CHARACTERISTICS SYMBOL
CPK	DENOTES CPK DIMENSIONS MINIMUM CPK VALUE
ST	DENOTES A CHARACTERISTIC THAT PROVIDES AN INDICATION OF PROCESS PERFORMANCE,PROCEDURE FOR MEASUREMENTAND TRACKINGTO BE DEFINED IN LITTELFUSE INSPECTION INSTRUCTIONS
CP	DENOTES CP DIMENSIONS, -MINIMUM CP VALUE MUST BE WITHIN THE DIMENSIONAL LIMITATIONS SHOWN ON DRAWING AND INITIALLY LOCATED TO ALLOW FOR MAXIMUM TOOL LIFE

	NAME	DATE
DRAWN	L. Dal Molin	29/04/2019
CHECKED	-	-
	-	-
	-	-

Littelfuse
Expertise Applied | Answers Delivered

FORM NO: CVP-PE40-0013 REV A

FIRST ANGLE PROJECTION

DO NOT SCALE DRAWING

TITLE
ELECTRICAL MAIN BATTERY SWITCH 12V POS.(+)

SIZE: A2 | DWG. NO. | OUTLINE: OL-08070161 | REV. A

SCALE 1:1 | SHEET 1 OF 1