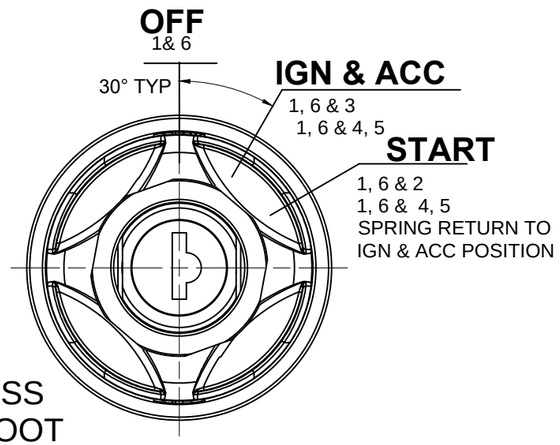

VIEW LESS
KEY & BOOT

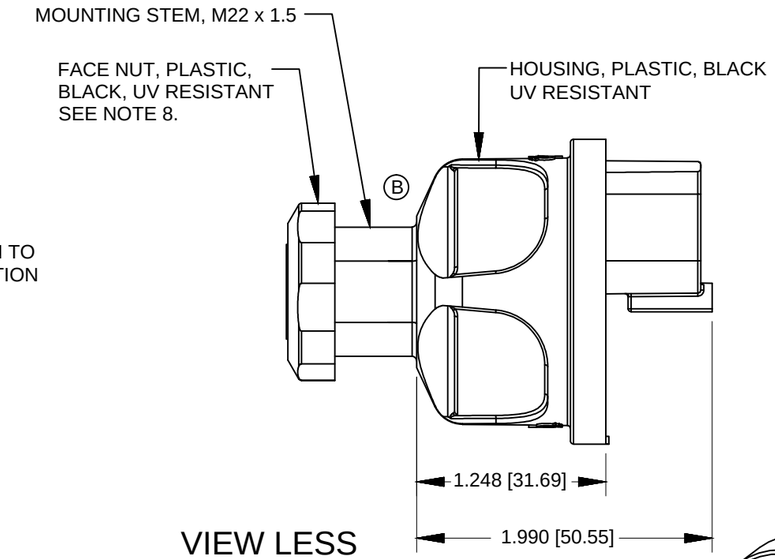

VIEW LESS
KEY & BOOT

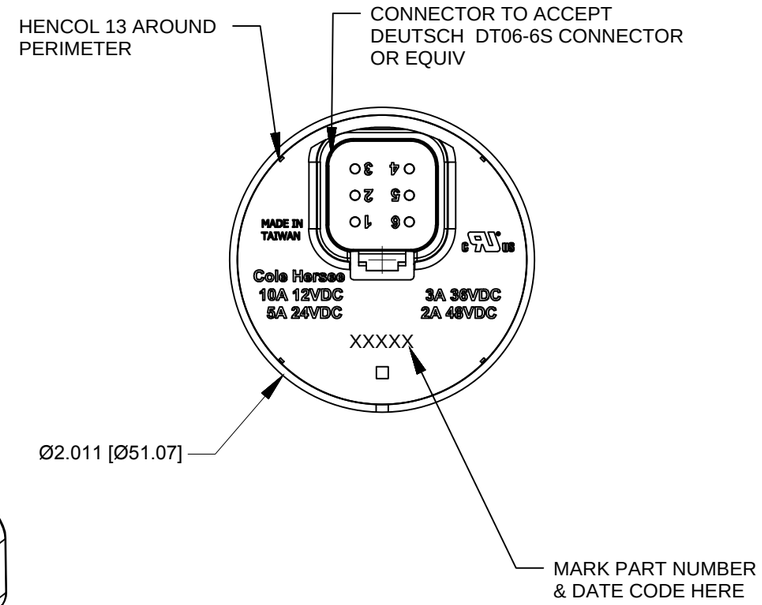

VIEW LESS
FACE NUT,
KEY & BOOT

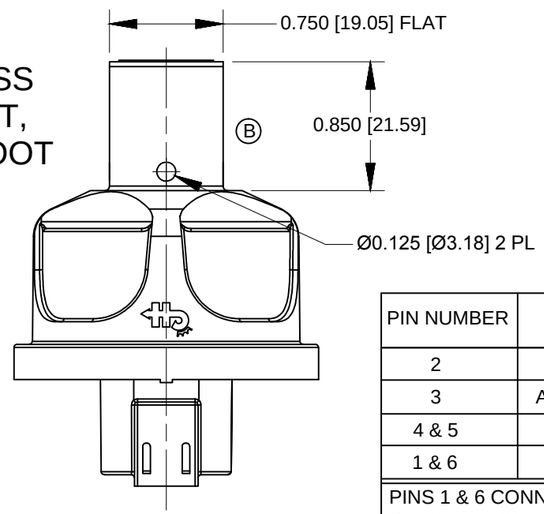

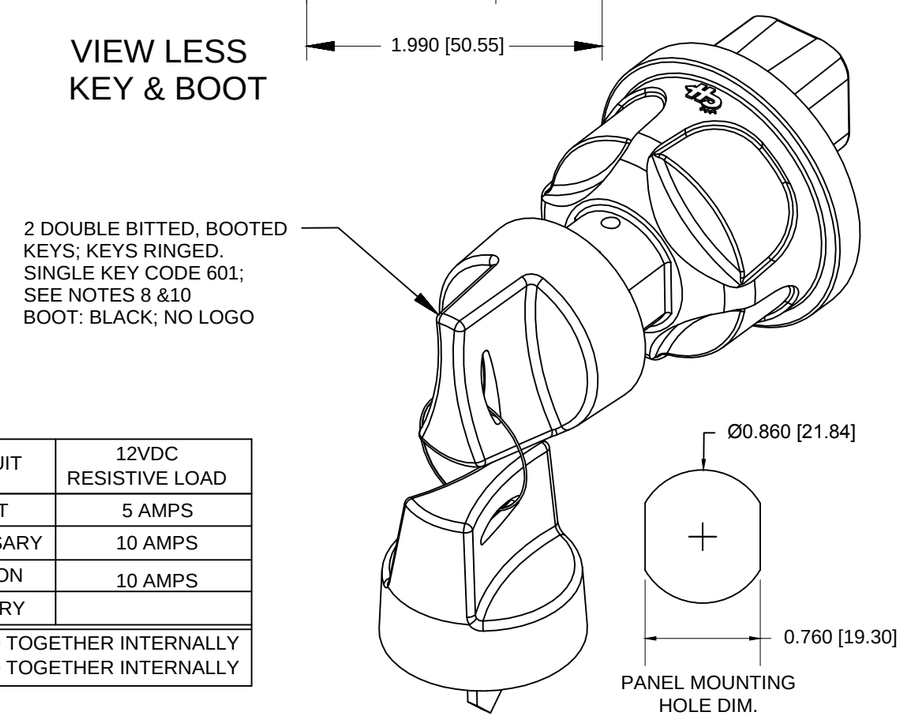

PIN NUMBER	CIRCUIT	12VDC RESISTIVE LOAD
2	START	5 AMPS
3	ACCESSARY	10 AMPS
4 & 5	IGNITION	10 AMPS
1 & 6	BATTERY	
PINS 1 & 6 CONNECTED TOGETHER INTERNALLY PINS 4 & 5 CONNECTED TOGETHER INTERNALLY		

NOTES:
1. TOLERANCES PLUS OR MINUS 0.015 [0.38]
2. CONTACT AREA SEALED TO IP67
3. BACK OF SWITCH SEALED WHEN MATING CONNECTOR IS INSTALLED
4. FOR RESISTIVE LOAD RATING SEE CHART OR BACK OF SWITCH
5. KEY REMOVEABLE IN OFF POSITION ONLY
6. FOR PIN LOCATIONS SEE CHART
7. MATERIALS: HOUSING BLACK UV RATED THERMOPLASTIC
   INTERNAL STATIONARY CONTACTS COPPER
8. KEY BOOT FITS OVER FACE NUT, BOOT WITH NO CH LOGO
9. SWITCH TESTED TO SAE J259,UL RECOGNIZED TO UL 1054
10. SWITCH SUPLIED WITH SINGLE KEY CODE 601
11. SW. MUST NOT BREAK CIRCUIT OR BE DAMAGED IF
    TORQUED TO 15 IN-LBS [1.69Nm]
12. IF THE APPLICATION MOUNTS THE SWITCH WITH THE LOCK
    CYLINDER OR LEVER APPROACHING VERTICAL, CONTACT THE
    FACTORY FOR AN APPLICATION REVIEW AND POTENTIAL ALTERNATE
    PRODUCTS BEFORE DESIGN IS SET

Revision Control Record

Rev.	Description of Change	ECN No.	Date
A	RELEASED DRAWING	10681	07/7/14
B	REMOVE BRASS HEX NUT	10983	09/9/14

Revision Control Record

Rev.	Description of Change	ECN No.	Date

Tolerances Unless otherwise specifically noted, the following are default tolerances;
* 2-place Decimal Dimensions +/- .02"
* 3-place Decimal Dimensions +/- .005"
* Angular Dimensions +/- 1.0 Deg.
* Metric: Refer to equivalent English Dimension Tolerance
>>> NOTE: *All tolerances are Non-Cumulative.* <<<

Dimensional Units All dimensions are expressed in inches except those shown in brackets (xxx) are expressed in millimeters

"REF." or an Asterisk (*) = Non-Toleranced Reference Dimension, shown for clarification purposes only.

PROPRIETARY INFORMATION This Engineering Drawing, and the information contained herein, is proprietary to Cole Hersee Company and may not be disclosed, re-produced, or in any other way transferred or communicated to any other party without the express written consent of an authorized representative of Cole Hersee Company.

DESIGN CONTROL It is the responsibility of the individual using / referencing this drawing to assure that the noted design revision level agrees with the revision level of the Controlled Document (Master Drawing). This is a NON-CONTROLLED DOCUMENT unless otherwise specifically noted.

DO NOT SCALE - Dimensional variation may occur during printing / reproduction.

Special Characteristics:
- CC Critical Characteristic, relating to Safety and/or Regulatory Compliance
- X Significant Characteristic relating to Process Control (SPC)
- KC Control Dimension relating to Form - Fit - Function as defined by Cole Hersee Company and/or the Customer

(Note that the identification of any Characteristics as being "Special" does not alter the requirement that ALL specificed dimensions & tolerances must be met.)

Cole Hersee Co.
20 Old Colony Ave., South Boston, MA, 02127
Phn: 617-268-2100 Web: www.colehersee.com

Description: SW, ROT, 3POS, PLSTC

Drawing / Part No.: 95060-63

Current Rev. B

Used On or Ref.: EX29187	Scale: 1:1	Drawn By: C.Miller	Date Drawn: 7/11/14	Responsible Engineer: G.Augu	PAGE 1 Created using Autocad Inventor