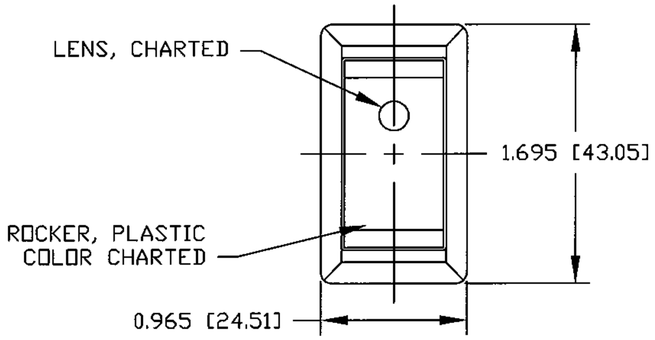


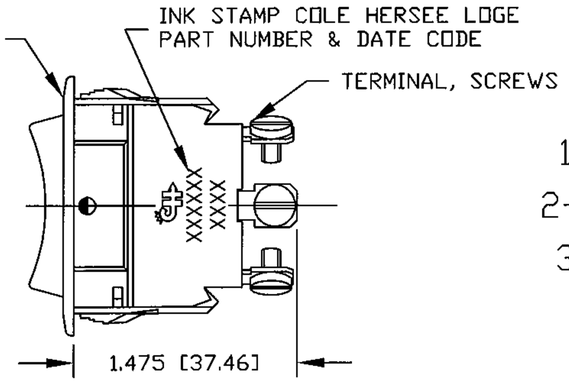


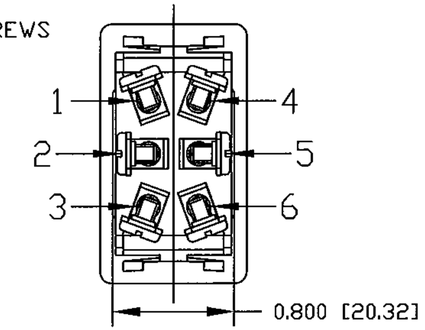


NOTES:
1. ALL DIMENSIONS ARE REFERENCE ONLY
2. CONTACT RATING:
   25 AMPS @ 12V DC
   15 AMPS @ 24V DC
3. SILVER CONTACTS

## ROCKER POSITIONS

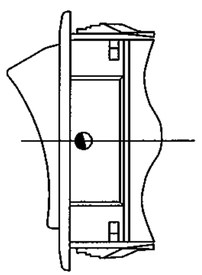

POSITION A

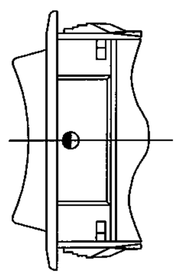

POSITION B

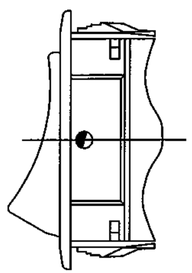

POSITION C

## IMPRINTING LOCATION

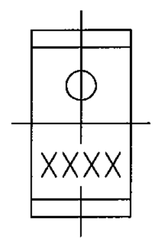


LOCATION D

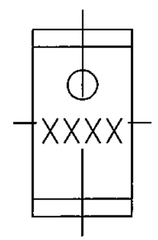


LOCATION E

LOCATION F

## LENS LOCATION

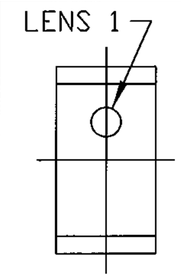


LOCATION G

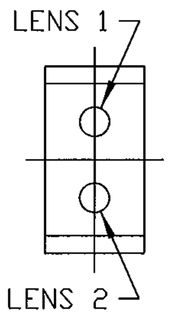


LOCATION H

LOCATION J

LOCATION K

## MOUNTING HOLE DETAIL

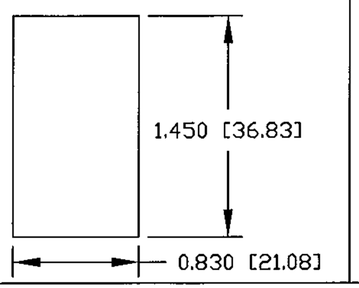


## ROCKER COLORS

BLACK

## IMPRINT COLORS

WHITE

## LAMP VOLTAGE

12V DC
24V DC

## LENS COLORS

AMBER
BLUE
GREEN
RED

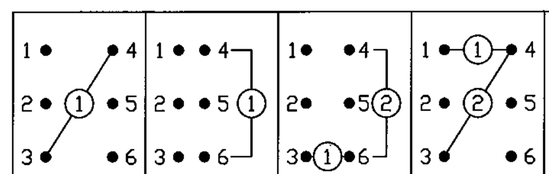


| 1 | 2 | 3 | 4 | 5 | 6 | 7 | 8 | 9 | 10 | 11 |
|---|---|---|---|---|---|---|---|---|---|---|

LAMP SCHEMATIC

**Revision Control Record**

| Rev. | Description of Change | ECN No. | Date |
|---|---|---|---|
| B | CHANGE NOTES | 09378 | 07/30/09 |

| Rev. | Description of Change | ECN No. | Date |
|---|---|---|---|
| | | | |

**Tolerances** Unless otherwise specifically noted, the following are default tolerances;

| 2-places | 3-places | Angular |
|---|---|---|
| +/- 0.02" | +/- 0.005" | +/- 1° |

Metric: Shown in [ ] refers to equivalent English Dim Tol

"REF." or an Asterisk (*) = Non-Toleranced Reference Dimension, shown for clarification purposes only.

NOTE: *All tolerances are Non-Cumulative.*

**PROPRIETARY INFORMATION**
This Engineering Drawing, and the information contained herein, is proprietary to Cole Hersee Company and may not be disclosed, re-produced, or in any other way transferred or communicated to any other party without the express written consent of an authorized representative of Cole Hersee Company.

**Special Characteristics:**

- (CC) Critical Characteristic, relating to Safety and/or Regulatory Compliance
- [X] Significant Characteristic relating to Process Control
- (KC) Control Dimension relating to Form - Fit - Function as defined by Cole Hersee Company and/or the Customer

**Cole Hersee Co.**
20 Old Colony Ave., South Boston, MA, 02127
Phn: 617-268-2100 Web: www.colehersee.com

**Description:** ROCKER SWITCH

**Drawing / Part No.:** 56327 CHART

**Current Rev.** B

FORM CHT-6 (2/07) | Used On or Ref.: | Scale: 1:1 | Drawn BY: MJT | Date Drawn: 11/09/93 | Pg. 1 of 2