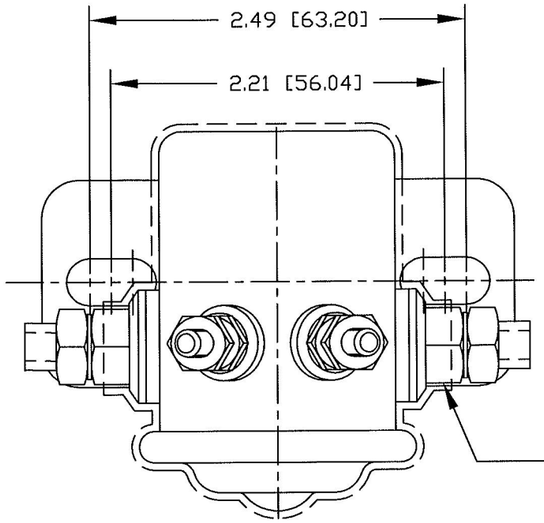

THIS KEPS NUT (2PLS) IS TIGHTENED AT THE FACTORY TO THE PROPER SPECS AND MUST NOT BE LOOSENED OR REMOVED UNDER ANY CIRCUMSTANCES. REMOVING OR LOOSENING THIS NUT WILL CAUSE PRODUCT TO MALFUNCTION. SEE NOTE 8

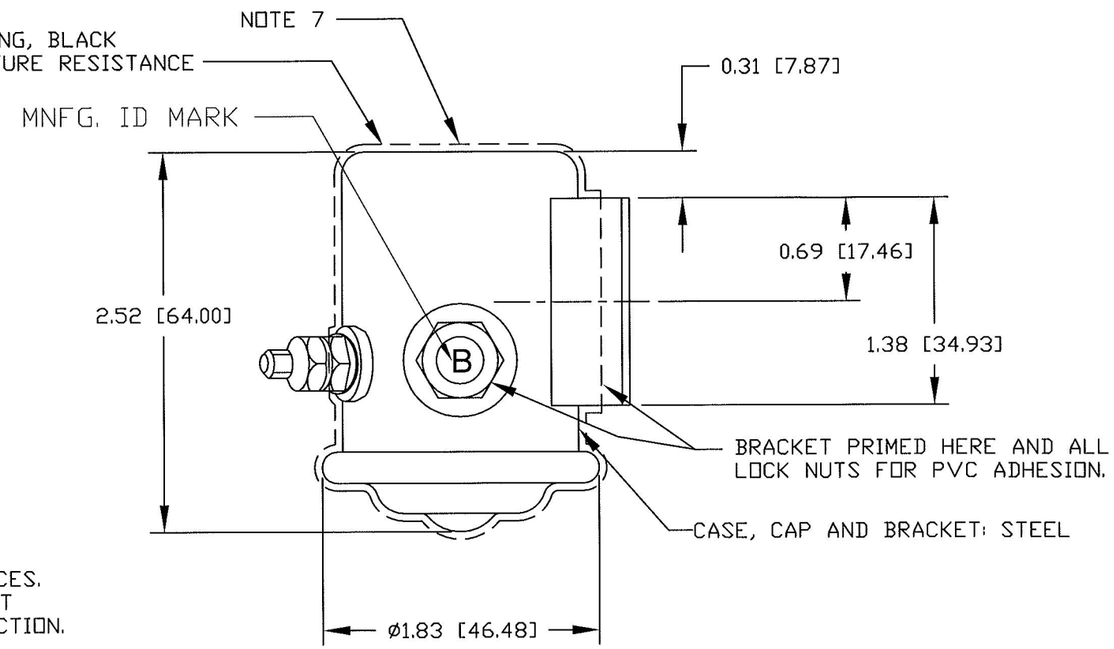

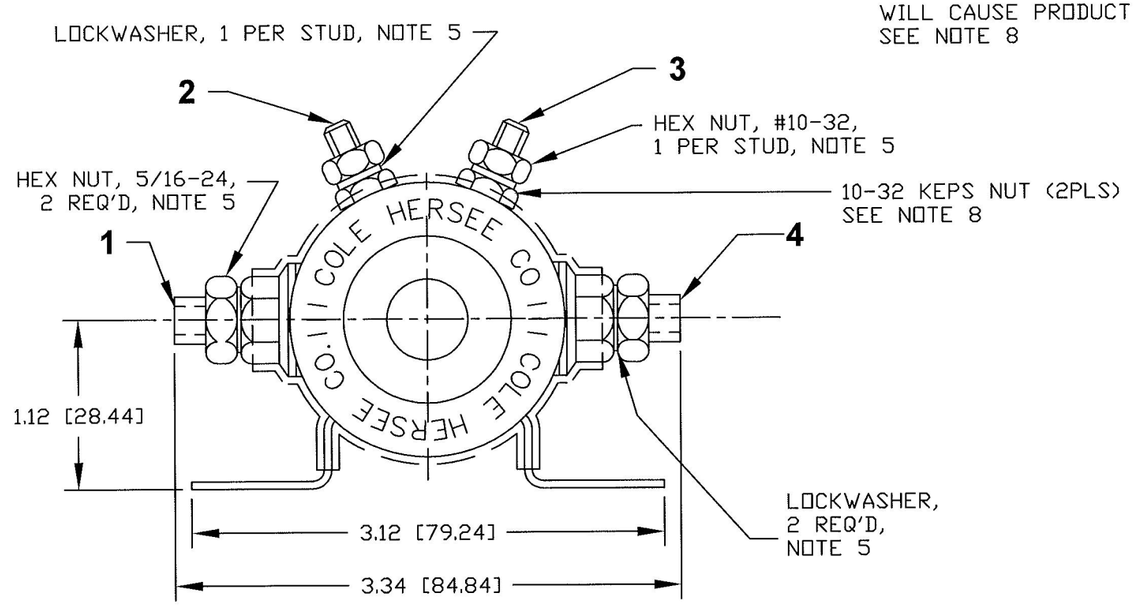

SCHEMATIC

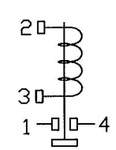

NOTES:
1. ALL STEEL PARTS PLATED.
2. ALL DIMENSIONS ARE REFERENCE ONLY UNLESS OTHERWISE SPECIFIED
3. ELECT. RATING: 200A @ 12Vdc, CONTINUOUS. COIL RESISTANCE: 17.5 OHMS.
4. MAX TORQUE FOR CUSTOMER APPLIED NUTS TO BE: #10-32= 15 IN-LBS (1.69 N.m); 5/16-24= 35 IN-LBS (3.95 N.m)
5. HARDWARE WILL BE BAGGED AND SHIPPED LOOSE.
6. ALL CONTACTS ARE SILVER LAMINATED.
7. PART NUMBER, DATE CODE & VOLTAGE INK STAMPED ON BOTTOM OF SOLENOID.
8. 5/16 AND 10-32 KEPS NUTS MUST NEVER BE REMOVED OR LOOSENED. THEY ARE FACTORY-TORQUED TO PROPER SPECS.

Revision Control Record

Rev.	Description of Change	ECN No.	Date
A	NEW NUMBER RELEASE	11200	6/27/11

Rev.	Description of Change	ECN No.	Date

Tolerances Unless otherwise specifically noted, the following are default tolerances;

2-places	3-places	Angular
+/- 0.02"	+/- 0.005"	+/- 1°

Metric: Shown in [ ] refers to equivalent English Dim Tol

"REF." or an Asterisk (*) = Non-Toleranced Reference Dimension, shown for clarification purposes only.

NOTE: *All tolerances are Non-Cumulative.*

PROPRIETARY INFORMATION
This Engineering Drawing, and the information contained herein, is proprietary to Cole Hersee Company and may not be disclosed, re-produced, or in any other way transferred or communicated to any other party without the express written consent of an authorized representative of Cole Hersee Company.

Special Characteristics:
- (CC) Critical Characteristic, relating to Safety and/or Regulatory Compliance
- [X] Significant Characteristic relating to Process Control
- (KC) Control Dimension relating to Form - Fit - Function as defined by Cole Hersee Company and/or the Customer

Cole Hersee Co.
20 Old Colony Ave., South Boston, MA, 02127
Phn: 617-268-2100 Web: www.colehersee.com

Description: SOLENOID, N/O, 12V

FORM CHT-6 (2/07)	Used On or Ref.: 24143-03	Scale: 1:1	Drawn BY: G.Auguste	Date Drawn: 6/27/11	Pg. 1 of 1	Drawing / Part No.: 24213-03	Current Rev. A