COVER PART	COVER OPENING POSITION
A	A C E
B	A C E
C	A E

LTR	DATE	REVISION	CHK	APD
A	05/25/05	61735 - RELEASED GLAB		
B	04/05/07	85414D-REDRAWN IN UG GMB		
C	08/31/07	000170EC/C - REMOVE USA FROM COVER BRK		
D	04/24/08	000463EC/D-CHG. NOTE 2 ADDED NOTES GMB		

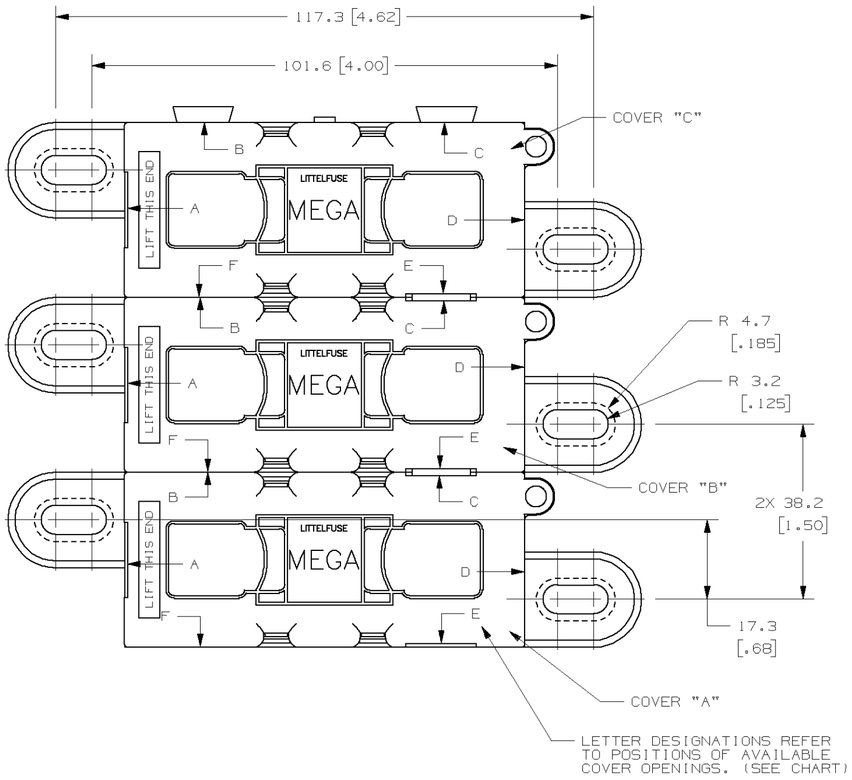

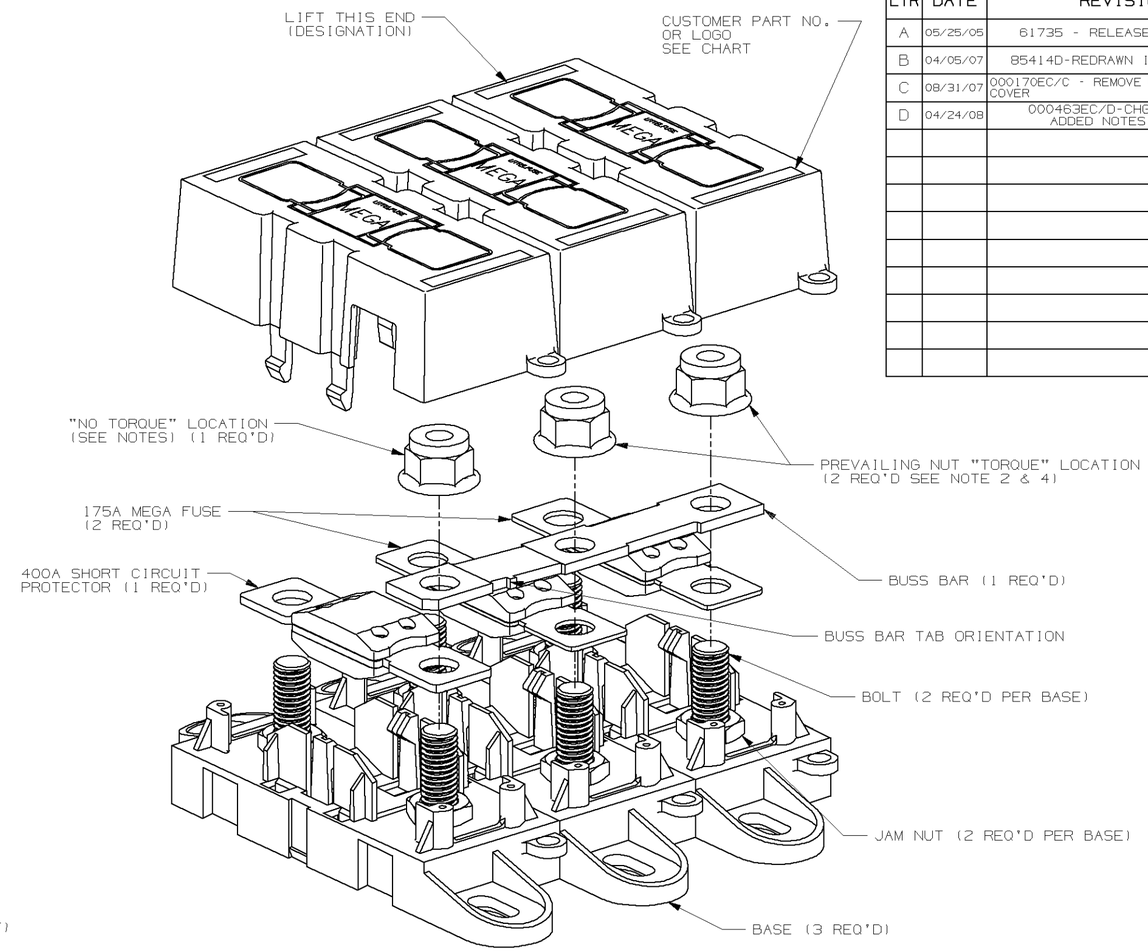

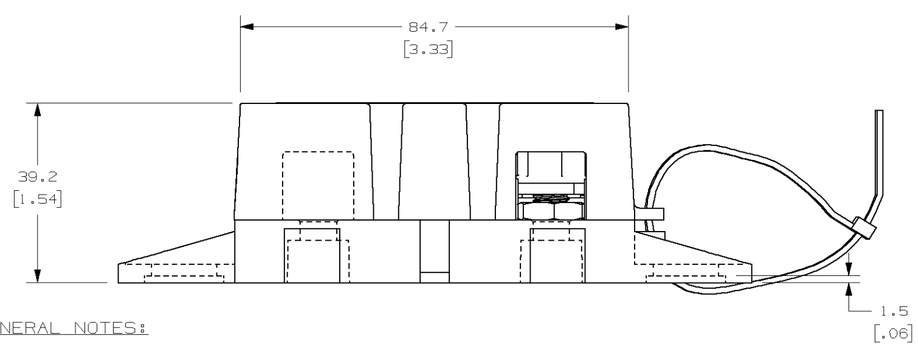

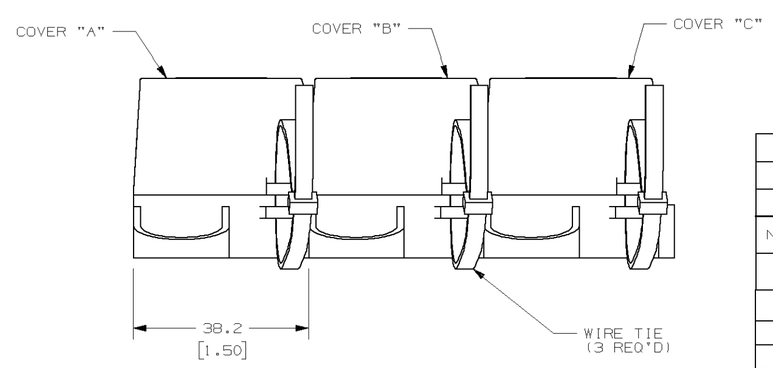

GENERAL NOTES:

1. COVER RETENTION TEST: MINIMUM FORCE OF 2 LBS. IS REQUIRED TO REMOVE COVER WHEN IT IS SUSPENDED UPSIDE DOWN. FORCE SHALL BE APPLIED THROUGH THE INNER HOLES (2) IN BASE. USE FIXTURE #T-C403 TO SUPPORT PART.

2. TORQUE APPLIED TO ALL "TORQUE" LOCATIONS TORQUE REQUIREMENTS FOR THE HEX NUT USED TO SECURE THE BUSSBAR OR THE CUSTOMER RING TERMINAL TO THE MEGA FUSE TO BE:
   8mm NUT - 12-18 NEWTON METERS [106-159 IN-LBS]

3. HOLDER MEETS L/F VALIDATION TEST SPEC. VS-005002.

4. FLANGED LOCKNUT TO MEET THE FOLLOWING CRITERIA:
   FORD PART NO. W520202
   FINISH: S437.

   MATERIALS:
   * BODY - GLASS FILLED THERMOPLASTIC
     COLOR - BLACK
   * COVER - THERMOPLASTIC
     COLOR - BLACK
   * WIRE TIE - THERMOPLASTIC
     COLOR - BLACK
   * STUDS & NUTS - M8 X 1.25 STEEL ZINC PLATE WITH TRIVALENT CHROMATE, LEACHED AND SEALED, INTEGRAL TORQUE CONTROL LUBRICANT FINISH, (MEETS 96 HR. ASTM STD. B-117 SALT SPRAY REQ.)

5. MANUALLY ASSEMBLE FLANGED PREVAILING NUT ONTO STUD UP TO THE BOTTOM OF THE PLASTIC INSERT IN THE NUT, FOR ALL "NO TORQUE" LOCATIONS.

METRIC

NO	COMPONENT NO	DESCRIPTION	QTY/M	U/M
-				
-				
-				

BILL OF MATERIAL

UNLESS OTHERWISE SPECIFIED, DIMENSIONS ARE IN MILLIMETERS. DIMENSIONS IN BRACKETS [ ] ARE INCHES

UNLESS OTHERWISE SPECIFIED, DIMENSIONS DO NOT INCLUDE PLATING.

◎	DENOTES CRITICAL CHARACTERISTICS.
CPK	DENOTES CPK DIMENSIONS, -MINIMUM CPK VALUE
⟨ST⟩	DENOTES A CHARACTERISTIC THAT PROVIDES AN INDICATION OF PROCESS PERFORMANCE. PROCEDURE FOR MEASUREMENT AND TRACKING TO BE DEFINED IN LITTELFUSE INSPECTION INSTRUCTIONS
CP	DENOTES CP DIMENSIONS, -MINIMUM CP VALUE MUST BE WITHIN THE DIMENSIONAL LIMITATIONS SHOWN ON DRAWING AND INITIALLY LOCATED TO ALLOW FOR MAXIMUM TOOL LIFE

COPIES TO

1	9	18
2	10	19
3	12	20
4	13	21
5	14	23
6	15	33
7	16	43
8	17	53

MATL SPEC

FINISH

DRW GLAB	DATE 05/25/05	SCALE 1:1
CHK	DATE	SUPER DR
APPD	DATE	FINSH GOOD WT GRAMS/PIECE

TOLERANCE UNLESS OTHERWISE SPECIFIED
ONE PLACE DEC +/-.3
TWO PLACE DEC +/-.25
THREE PLACE DEC +/-.100
ANGULAR +/-1°

3RD ANGLE PROJECTION

TITLE 3 POLE MEGA HOLDER FOR 400A & TWO 175A

Littelfuse®
DES PLAINES, ILLINOIS 60016

REVISION D | DRWG. NO. 02983003ZXT | OUTLINE

CAD GENERATED DRAWING – NO PENCIL CHANGES ALLOWED