THIS DRAWING AND THE INFORMATION CONTAINED WITHIN IT ARE CONFIDENTIAL AND MAY NOT BE COPIED OR DISCLOSED WITHOUT THE WRITTEN PERMISSION OF LITTELFUSE.

REVISIONS

ZONE	REV.	DESCRIPTION	DATE	APPROVED
	A	PCO #5300103. INITIAL RELEASE. DSILVA.	10/4/2022	L.ARGIL

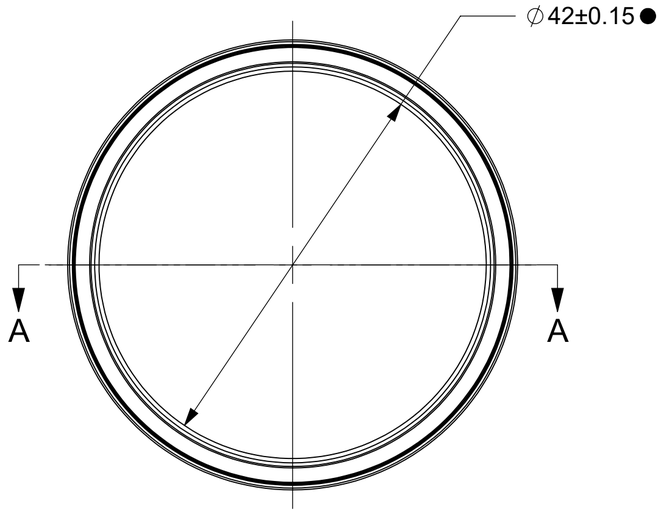

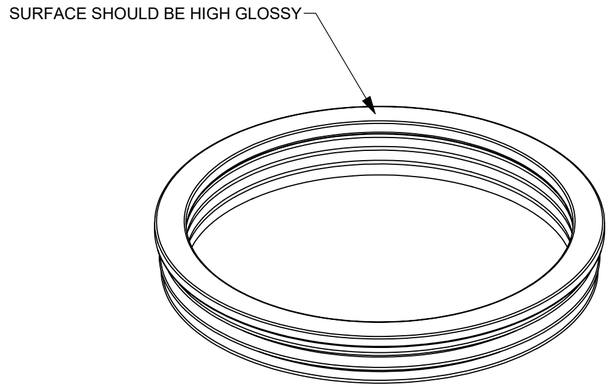

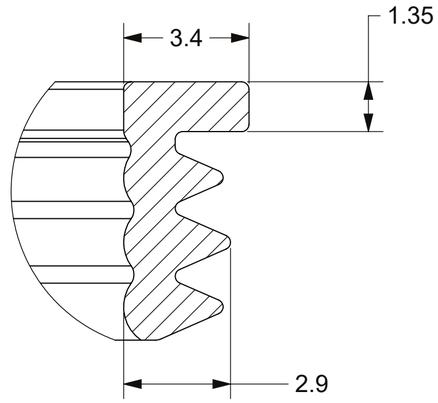

DETAIL B
SCALE 8:1

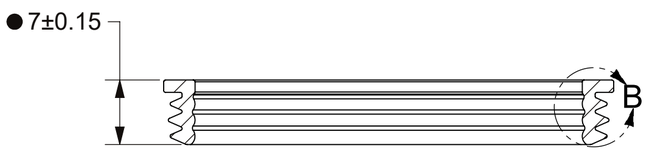

SECTION A-A

NOTES:

1. ASSOCIATED 3D CAD FILE DEFINES ALL NON-DIMENSIONED FEATURES.
2. MATERIAL SHALL BE SILICONE RUBBER, GREEN.

TOLERANCES UNLESS OTHERWISE SPECIFIED (REF.ISO2768-M)

.5 to 3	>3 to 6	>6 to 30	>30 to 120	>120 to 400								ANGLE
±0.10	±0.10	±0.20	±0.30	±0.50								±0.5°

DIMENSIONS ARE SHOWN IN MILLIMETERS. DIMENSIONS AND TOLERANCES ARE DEFINED ACCORDING TO ANSI/ASME Y14.5-1994.

PER CH-NPD20-0008 PROCEDURE

●	FIT/ FUNCTION CRITICAL CHARACTERISTICS
<S>	SAFETY/ COMPLIANCE CRITICAL CHARACTERISTICS SYMBOL
CPK	DENOTES CPK DIMENSIONS MINIMUM CPK VALUE
ST	DENOTES A CHARACTERISTIC THAT PROVIDES AN INDICATION OF PROCESS PERFORMANCE.PROCEDURE FOR MEASUREMENTAND TRACKINGTO BE DEFINED IN LITTELFUSE INSPECTION INSTRUCTIONS
CP	DENOTES CP DIMENSIONS, -MINIMUM CP VALUE MUST BE WITHIN THE DIMENSIONAL LIMITATIONS SHOWN ON DRAWING AND INITIALLY LOCATED TO ALLOW FOR MAXIMUM TOOL LIFE

	NAME	DATE
DRAWN	DSILVA	7/19/2022
CHECKED	-	-
	-	-
	-	-

FORM NO: CVP-PE40-0005 REV B

THIRD ANGLE PROJECTION

DO NOT SCALE DRAWING

Littelfuse®
Expertise Applied | Answers Delivered

TITLE
SILICON RUBBER GREEN

SIZE	DWG. NO.	REV.
C	OUTLINE OL-901-326	A

SCALE 2:1 SHEET 1 OF 1