MM	IN
0.25	.010
0.96	.038
1.82	.072
4.74	.187
11.09	.437
12.70	.500
15.87	.625
16.66	.656
26.18	1.031
32.53	1.281

REF M484

COLE-HERSEE CO.

5558

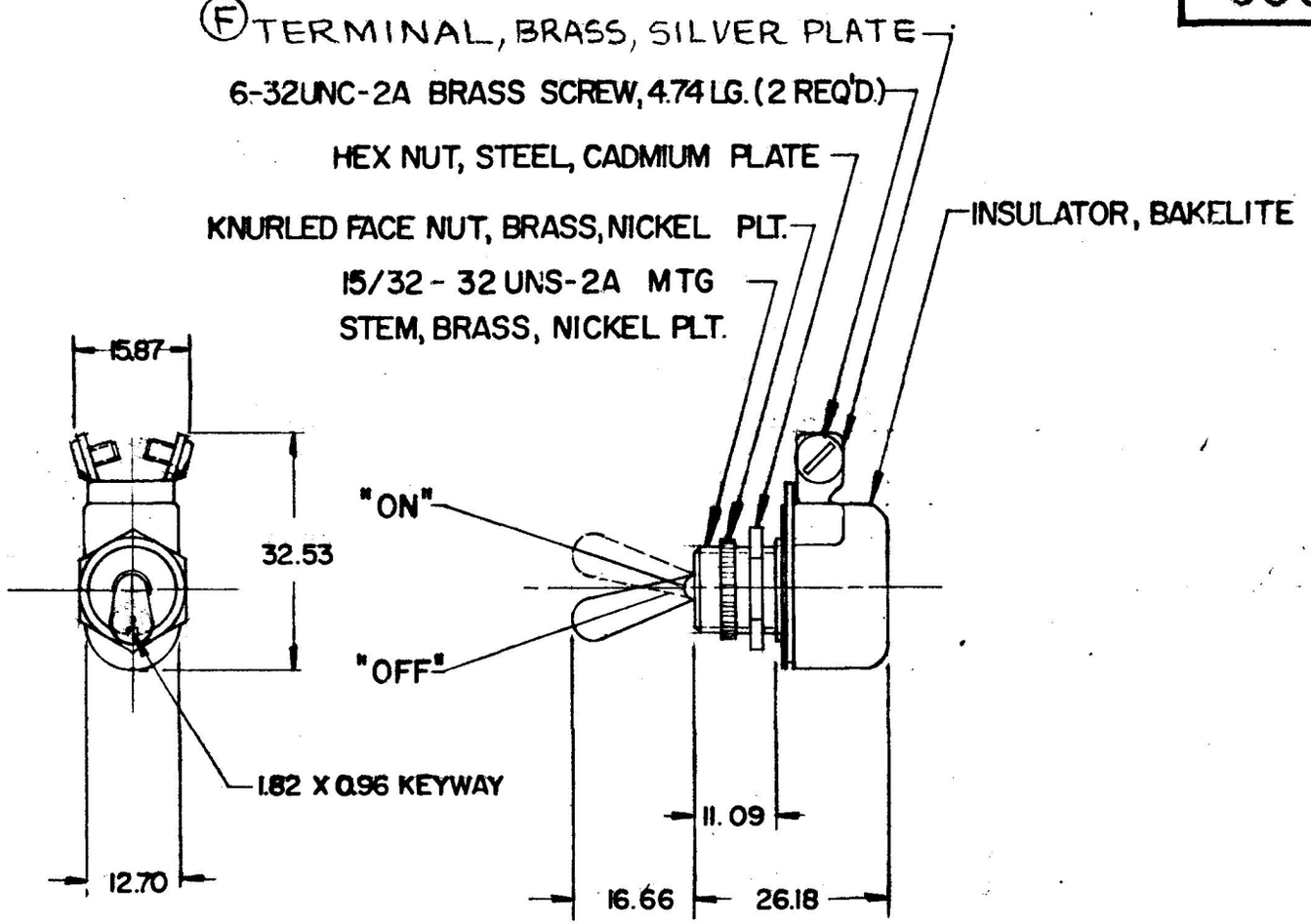

REF MARINE M-484

METRIC

DO NOT SCALE

LET	WAS	DATE	BY	LET	WAS	DATE	BY
				F	ECN 24601	10/27/70	BL
				E	REDRAWN	4-3-71	JV

MATERIAL	DRAWN	CHECKED	APPRV'D.	SCALE	DATE DRAWN
—	RM	4-13-78		FULL	3 - 14 - 51

FINISH —

TOLERANCES
FRACTIONAL ±
DECIMAL ±0.25

COLE-HERSEE COMPANY
BOSTON, MASS. 02127, U.S.A.

TOGGLE SWITCH

DATE BLUEPRINT

5558

SPAULDING CO., INC. 21-10961

Confidential Property of Cole Hersee