COVER PART	COVER OPENING POSITION
A	C F
B	A C D E
C	B E

LTR	DATE	REVISION	CHK	APD
A	07/18/06	61864 - RELEASED DJG		
B	04/10/07	85414D-REDRAWN IN UG GMB		
C	08/31/07	000170EC/C - REMOVE USA FROM COVER BRK		

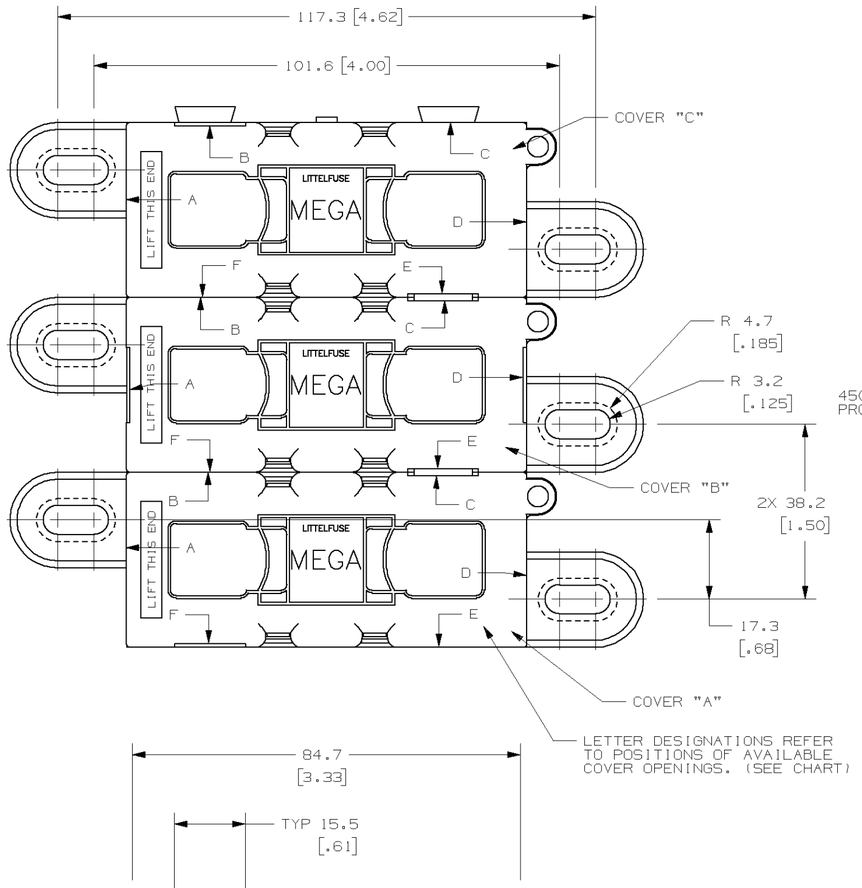

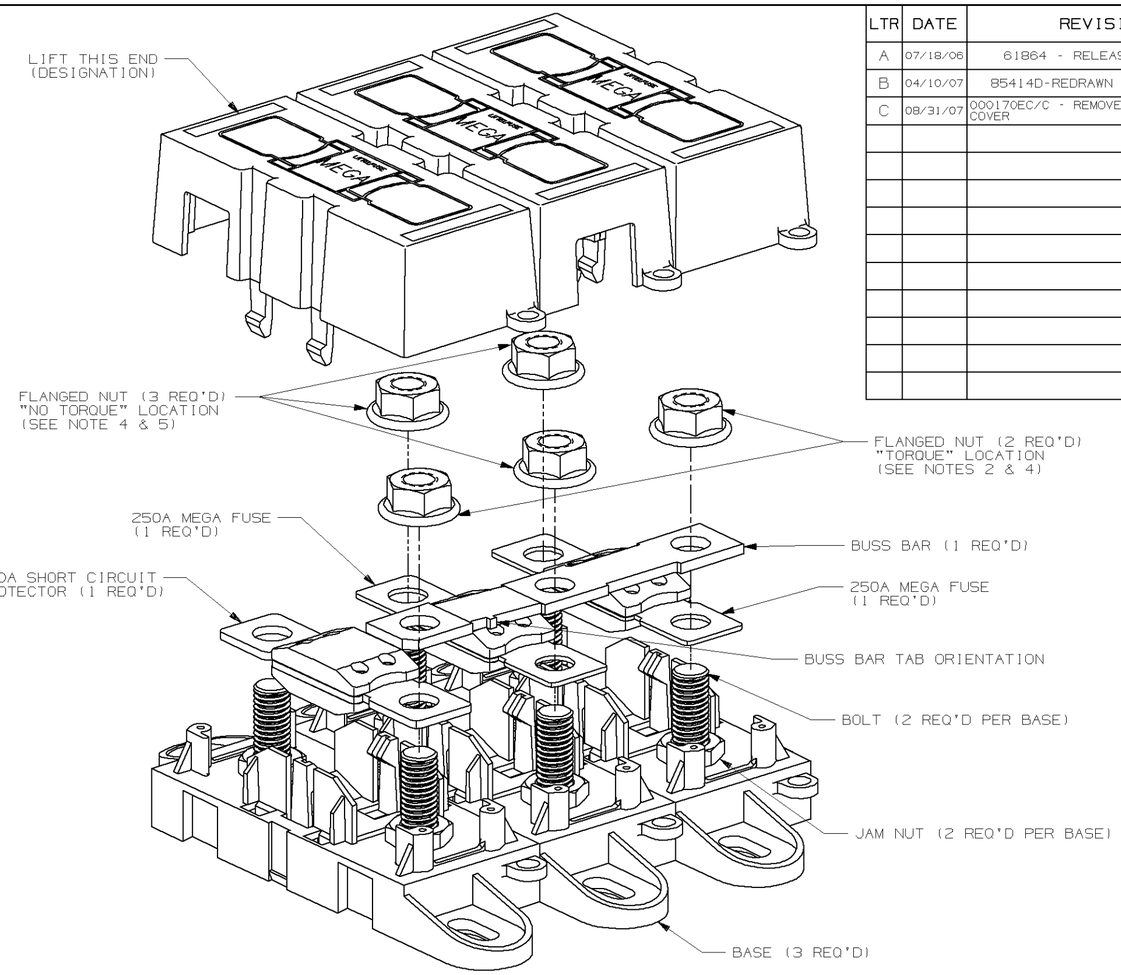

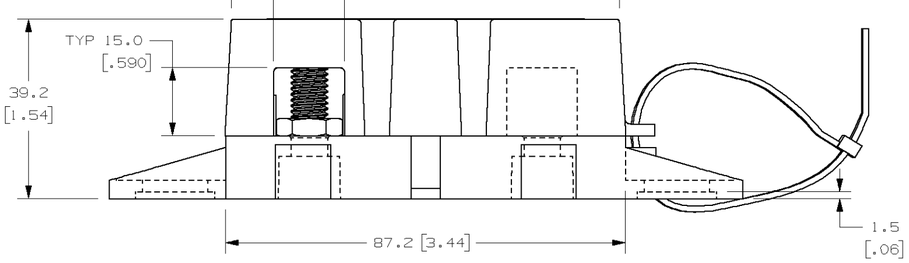

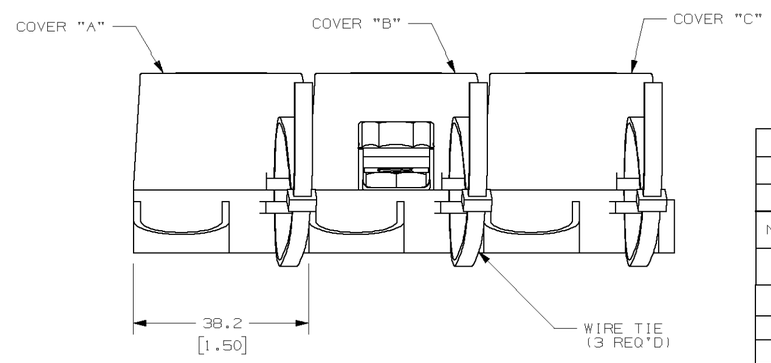

GENERAL NOTES:

1. COVER RETENTION TEST: MINIMUM FORCE OF 2 LBS. IS REQUIRED TO REMOVE COVER WHEN IT IS SUSPENDED UPSIDE DOWN. FORCE SHALL BE APPLIED THROUGH THE INNER HOLES (2) IN BASE. USE FIXTURE #T-C403 TO SUPPORT PART.
2. TORQUE REQUIREMENT FOR MEGA FUSE TERMINAL & CONNECTOR FLANGED NUTS TO BE: 8mm NUT - 12-18 NEWTON METERS [106-159 IN-LBS]
3. HOLDER MEETS L/F VALIDATION TEST SPEC. VS-005005.
4. FLANGED NUT TO MEET THE FOLLOWING CRITERIA: FORD PART NO. W520413 FINISH: S437.
5. MANUALLY ASSEMBLE FLANGED NUT ONTO STUD AND FINGER TIGHTEN ANYWHERE BELOW TOP OF STUD, FOR ALL "NO TORQUE" LOCATIONS.
6. MATERIALS:
   * BODY - GLASS FILLED THERMOPLASTIC COLOR - BLACK
   * COVER - THERMOPLASTIC COLOR - BLACK
   * WIRE TIE - THERMOPLASTIC COLOR - BLACK
   * STUDS & NUTS - M8 X 1.25 STEEL ZINC PLATED WITH TRIVALENT CHROMATE, LEACHED AND SEALED, INTEGRAL TORQUE CONTROL LUBRICANT FINISH, (MEETS 96 HR. ASTM STD. B-117 SALT SPRAY REQ.)

METRIC

NO	COMPONENT NO	DESCRIPTION	QTY/M	U/M
-				
-				
-				

BILL OF MATERIAL

UNLESS OTHERWISE SPECIFIED, DIMENSIONS ARE IN MILLIMETERS. DIMENSIONS IN BRACKETS [ ] ARE INCHES

UNLESS OTHERWISE SPECIFIED, DIMENSIONS DO NOT INCLUDE PLATING.

◎	DENOTES CRITICAL CHARACTERISTICS.
CPK	DENOTES CPK DIMENSIONS, -MINIMUM CPK VALUE
⟨ST⟩	DENOTES A CHARACTERISTIC THAT PROVIDES AN INDICATION OF PROCESS PERFORMANCE. PROCEDURE FOR MEASUREMENT AND TRACKING TO BE DEFINED IN LITTELFUSE INSPECTION INSTRUCTIONS
CP	DENOTES CP DIMENSIONS, -MINIMUM CP VALUE MUST BE WITHIN THE DIMENSIONAL LIMITATIONS SHOWN ON DRAWING AND INITIALLY LOCATED TO ALLOW FOR MAXIMUM TOOL LIFE

COPIES TO

1	9	18
2	10	19
3	12	20
4	13	21
5	14	23
6	15	33
7	16	43
8	17	53

MATL SPEC

FINISH

DRW DJG	DATE 02/03/06	SCALE 1:1
CHK	DATE	SUPER DR
APPD	DATE	FINSH GOOD WT GRAMS/PIECE

TOLERANCE UNLESS OTHERWISE SPECIFIED
ONE PLACE DEC +/-.3 THREE PLACE DEC +/-.100
TWO PLACE DEC +/-.25 ANGULAR +/-1°

3RD ANGLE PROJECTION

TITLE 3 POLE MEGA HOLDER FOR 450A & TWO 250A

Littelfuse® DES PLAINES, ILLINOIS 60016

REVISION	DRWG. NO.	OUTLINE
C	02983006ZXT	

CAD GENERATED DRAWING – NO PENCIL CHANGES ALLOWED