LTR	DATE	REVISION	CHK	APD
A	10/27/00	60421-RELEASE PJM		

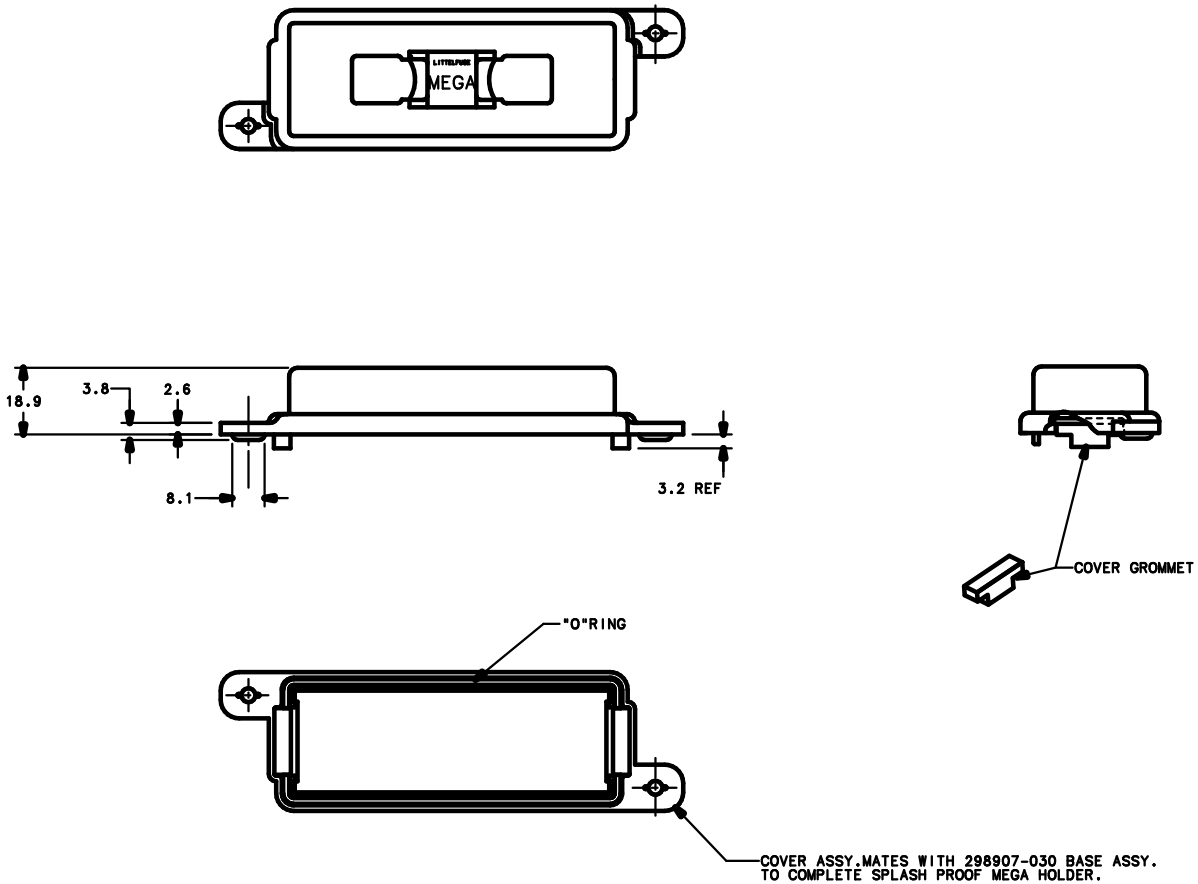

NOTES:

1. MATERIAL:

   COVER - NYLON 6/6
   GROMMENTS & O-RING - SILICONE: BLACK

2. 250 AMP. MAX. RATING AT 125°C.

NO	COMPONENT NO	DESCRIPTION	QTY/M	U/M

BILL OF MATERIAL

UNLESS OTHERWISE SPECIFIED, DIMENSIONS DO NOT INCLUDE PLATING.

⊙	DENOTES CRITICAL CHARACTERISTICS.
CPK	DENOTES CPK DIMENSIONS,-MINIMUM CPK VALUE 1.33
ST	DENOTES A CHARACTERISTIC THAT PROVIDES AN INDICATION OF PROCESS PERFORMANCE. PROCEDURE FOR MEASUREMENT AND TRACKING TO BE DEFINED IN LITTELFUSE INSPECTION INSTRUCTIONS.
CP	DENOTES CP DIMENSIONS,-MINIMUM CP VALUE MUST BE WITHIN THE DIMENSIONAL LIMITATIONS SHOWN ON DRAWING AND INITIALLY LOCATED TO ALLOW FOR MAXIMUM TOOL LIFE.

COPIES TO		
1	9	18
2	10	19
3	12	20
4	13	21
5	14	23
6	15	33
7	16	43
8	17	51

MATL SPEC: SEE NOTES

FINISH

DRW: PJM DATE: 10/27/00 SCALE: FULL

CHK: DATE: SUPER DR

APPR: DATE: RAW STK WT: LBS/M

TOLERANCE UNLESS OTHERWISE SPECIFIED
TWO PLACE DEC. ±.01 FRACTION ±
THREE PLACE DEC. ±.005 ANGULAR ±1°

TITLE: SPLASH PROOF MEGA HOLDER COVER ASS'Y

Littelfuse DES PLAINES, ILLINOIS 60016

REVISION: A

DRWG. NO. OUTLINE 298907-040

UNCONTROLLED DOCUMENT