4112-RC017	RED	---	---	YES
AC 4112-RC016	RED		WHITE	NO
4112-RC015	RED		WHITE	NO
4112-RC014	RED	CHECK ENGINE	BLACK	NO
4112-RC013	RED		WHITE	NO
4112-RC012	RED		WHITE	NO
4112-RC011	RED	OIL WATER	WHITE	NO
4112-RC010	RED	OIL	WHITE	NO
4112-RC009	RED	WATER	WHITE	NO
4112-RC007	RED		BLACK	NO
4112-RC006	RED	LOW AIR	BLACK	NO
4112-RC000	RED	---	---	NO
4112-AC001	AMBER	LOW OIL	BLACK	NO
4112-AC000	AMBER	---	---	NO
PART NO	LENS COLOR	IMPRINT	IMP COLOR	HARDWARE ASSEMBLED

12 VOLTS

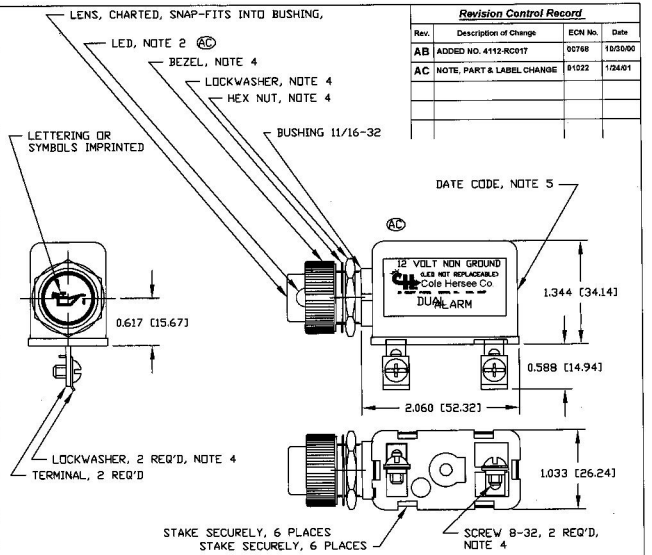

NOTES:
1. ALL STEEL PARTS PLATED
2. AC LED NOT REMOVEABLE
3. ALL DIMENSIONS REFERENCE
4. PARTS MAY BE ASSEMBLED OR SUPPLIED IN BAG, SEE CHART
5. MARK CASE AT RANDOM LOCATION AS TO WEEK & YEAR OF MANUFACTURE

Revision Control Record

Rev.	Description of Change	ECN No.	Date
AB	ADDED NO. 4112-RC017	00768	10/30/00
AC	NOTE, PART & LABEL CHANGE	01022	1/24/01

Tolerances: Unless otherwise specifically noted, the following are default tolerances:
* Surface Decimal Dimensions +/- .01"
* Surface Decimal Dimensions +/- .005"
* Angular Dimensions +/- 1.0 Deg.
* Note: Refer to equivalent English Dimension Tolerance
>>> NOTE: All tolerances are Non-Cumulative. <<<

Dimensional Units: All dimensions are expressed in inches except those shown in brackets (xxx) are expressed in millimeters.

"REF." or an Asterisk (*) = Non-Tolerance Reference Dimension, shown for clarification purposes only.

PROPRIETARY INFORMATION: This Engineering Drawing, and the information contained herein, is proprietary to Cole Hersee Company and may not be disclosed, reproduced, or in any other way transferred or communicated to any other party without the express written consent of an authorized representative of Cole Hersee Company.

DESIGN CONTROL: It is the responsibility of the individual using / referencing this drawing to assure that the noted design revision level agrees with the revision level of the Controlled Document (Master Drawing). This is a NON-CONTROLLED DOCUMENT unless otherwise specifically noted.

DO NOT SCALE - Dimensional variation may occur during printing / reproduction.

Key for Special Characteristics:
- Critical Characteristic, relating to Safety and/or Regulatory Compliance
- X Significant Characteristic relating to Process Control (SPC)
- Control Dimension relating to Form - Fit - Function as defined by Cole Hersee Company and/or the Customer

(Note that the identification of any Characteristics as being "Special" does not alter the requirement that ALL specified dimensions & tolerances must be met.)

Cole Hersee Co.
20 Old Colony Ave., South Boston, MA, 02127
Phn: 617-268-2100 Web: www.colehersee.com

Description: DUAL ALARM 12 V

Used On or Ref.:	Scale: 1:1	Drawn By: RMT	Date Drawn: 9/10/73	Responsible Engineer: N/A	Pg. 1 of 1	Drawing / Part No.: 4112	Current Rev. AC