MM	IN
0.25	.010
2.28	.090
8.63	.340
17.01	.670
17.27	.680
21.08	.830
22.86	.900
27.94	1.100
30.22	1.190
36.83	1.450
39.87	1.570
31.49	1.240

COLE-HERSEE CO.

56001-01
56001-05

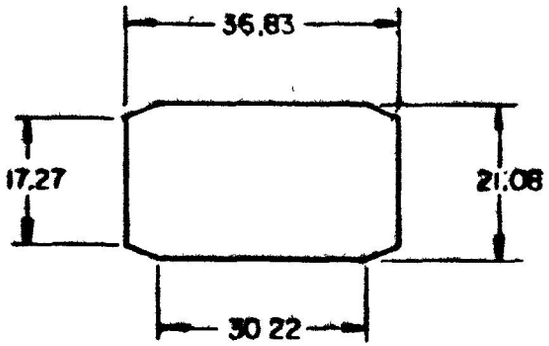

MOUNTING HOLE DETAIL

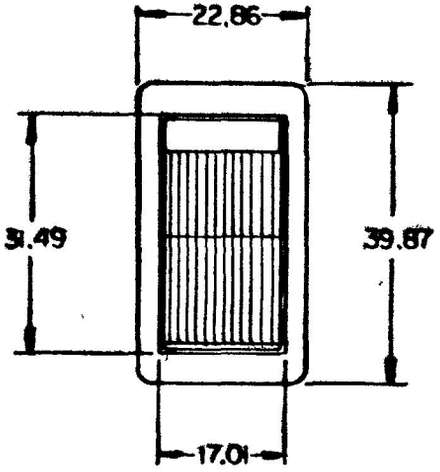

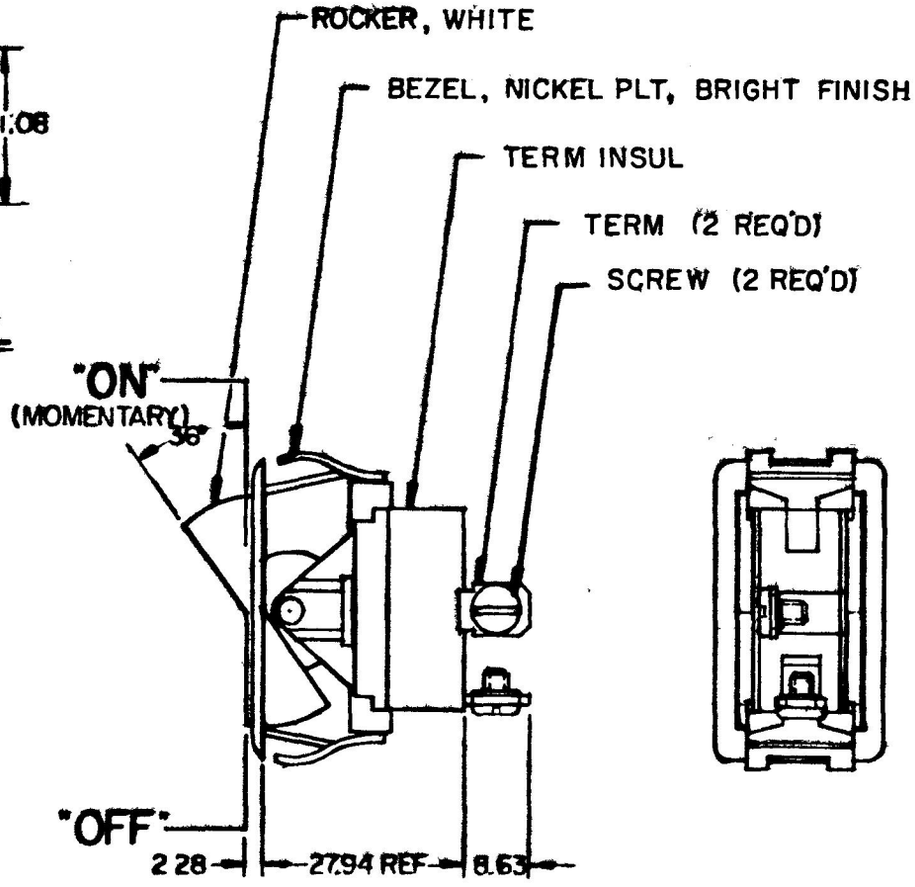

NOTE:
SILVER CONTACT RIVETS & SILVER CONTACT PAD

25 AMPS @ 12V DC LAMP LOAD

HEAVY DUTY

METRIC

56001-05 SAME AS 56001-01
EXCEPT BEZEL NICKEL PLATE
DULL FINISH

DO NOT SCALE

LET	WAS	DATE	BY	LET	WAS	DATE	BY
				F	REDRAWN	8-28-80	TR

MATERIAL — // —	DRAWN CF	CHECKED 8-29-80	APPRV'D	SCALE FULL	BASIC EXCEPT WITH BEZEL REPLACING BRACKET	DATE DRAWN 9-25-67
FINISH — // —	COLE-HERSEE COMPANY BOSTON, MASS. 02127, U.S.A.					DATE BLUEPRINT
TOLERANCES FRACTIONAL ± DECIMAL ±0.25	(MOMENTARY) SPST ROCKER SWITCH					56001-01 56001-05

SPAULDING CO., INC 21-10961

Confidential Property of Cole Hersee