MM	IN
[illegible]	[illegible]
7.[illegible]8	.09[illegible]
12.70	.500
13.71	.540
17.[illegible]	.670
17.27	.680
21.08	.830
22.86	.900
27.94	1.100
30.22	1.[illegible]
31.49	1.240
36.83	1.[illegible]
44.45	1.750
28.44	1.120

57300-02
57300-06

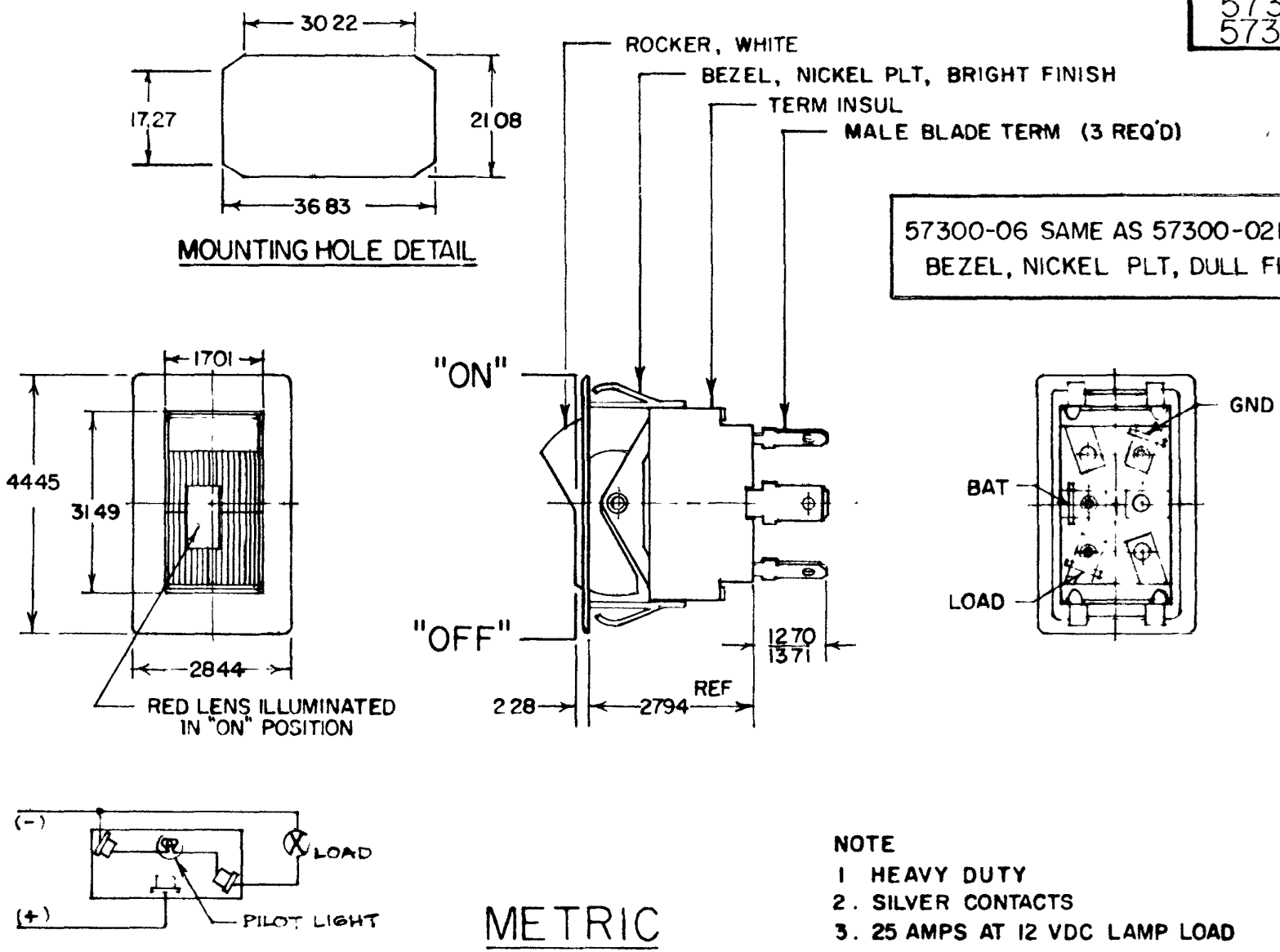

METRIC

NOTE
1 HEAVY DUTY
2. SILVER CONTACTS
3. 25 AMPS AT 12 VDC LAMP LOAD

DO NOT SCALE

LET	WAS	DATE	BY	LET	WAS	DATE	BY
				H	[illegible]	[illegible]	[illegible]

MATERIAL	DRAWN	CHECKED	APPRV'D	SCALE		DATE DRAWN
— # —	CF	[illegible]		[illegible]	57300 WITH WIDE BEZEL REPLACING BRACKET	10-4-67
FINISH — # —	Cole Hersee Co.					DATE BLUEPRINT
TOLERANCES DECIMAL ± METRIC ±.25	SP-ST ROCKER SWITCH WITH PILOT LIGHT					57300-02 57300-06

(H 185/4 78)

Confidential Property of Cole Hersee