72058-02

Confidential Property of Cole Hersee

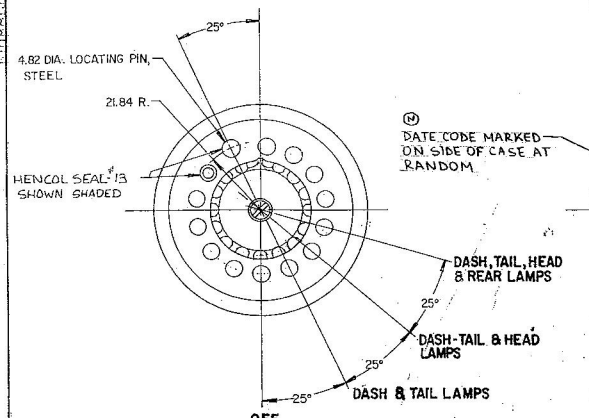

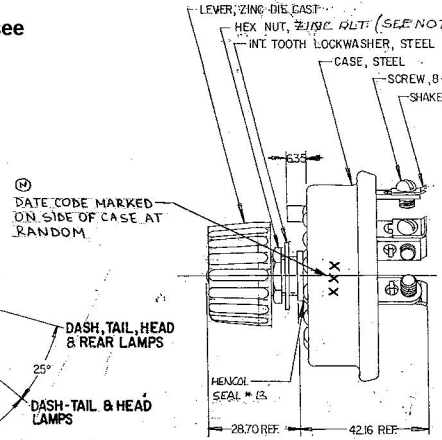

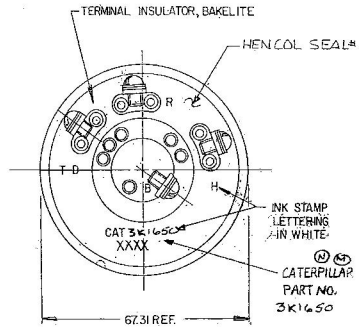

NOTES:

1. SILVER LAMINATED SHOULDER RIVETS STATIONARY CONTACTS, SOLID SILVER RIVETS MOVING CONTACT.
2. MELAMINE LINER
3. NUMBER OF POLES 1
   NUMBER OF THROWS 3
4. SEALING:
   A. O-RING AT MTG. STEM & SHAFT
   B. GASKET SEAL AT TERMINAL INSULATOR
5. ALL STEEL PARTS PLATED
6. RATING:
   12 V | 30 AMPS TOTAL
   24 V | 18 AMPS TOTAL
7. LIFE @ RATED CURRENT
   MAKE & BREAK
   12V, & 24 V - 100000 CYCLES MIN.
8. INSTALLATION TORQUE 6.75 Nm [5FT. LBS]

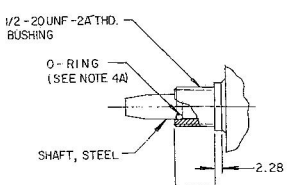

MOUNTING STEM DETAIL

METRIC

DO NOT SCALE

LET.	WAS	DATE	BY	LET	WAS	DATE	BY	MATERIAL	DRAWN	CHECKED	APPRV'D	SCALE		DATE DRAWN
									TJH	AF		1:1	EX 25396-B	11-4-93
				N	ECN 02356	7/24/92	H.L.	FINISH	Cole Hersee Co.					DATE BLUEPRINT
				M	ADDED NO. ECN 26428	4/23/93	FS							
				L	ECN 25515	12/8/93	AF	TOLERANCES DECIMAL ± METRIC ±	TRACTOR COMBINATION LIGHT SWITCH					72058-02
					ISSUED	[illegible]	[illegible]							

COLE-HERSEE CO.