LTR	DATE	REVISION	CHK	APD
A	10/27/00	60421 - RELEASED PJM		
B	03/26/07	85414D-REDRAWN IN UG GMB		

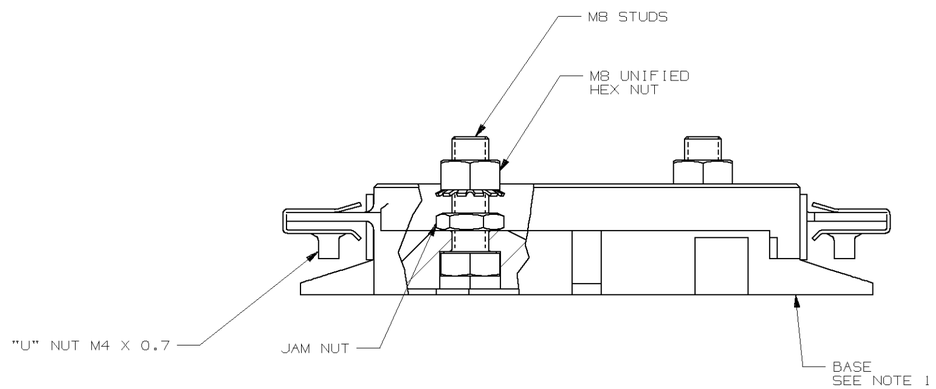

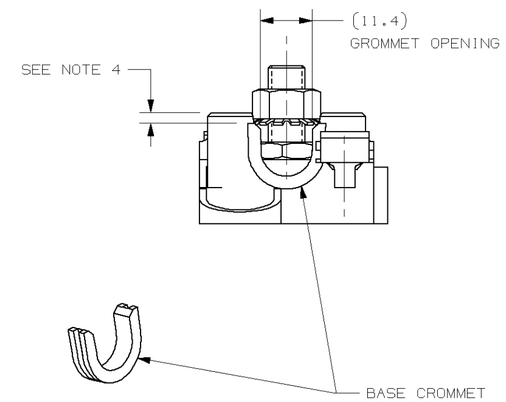

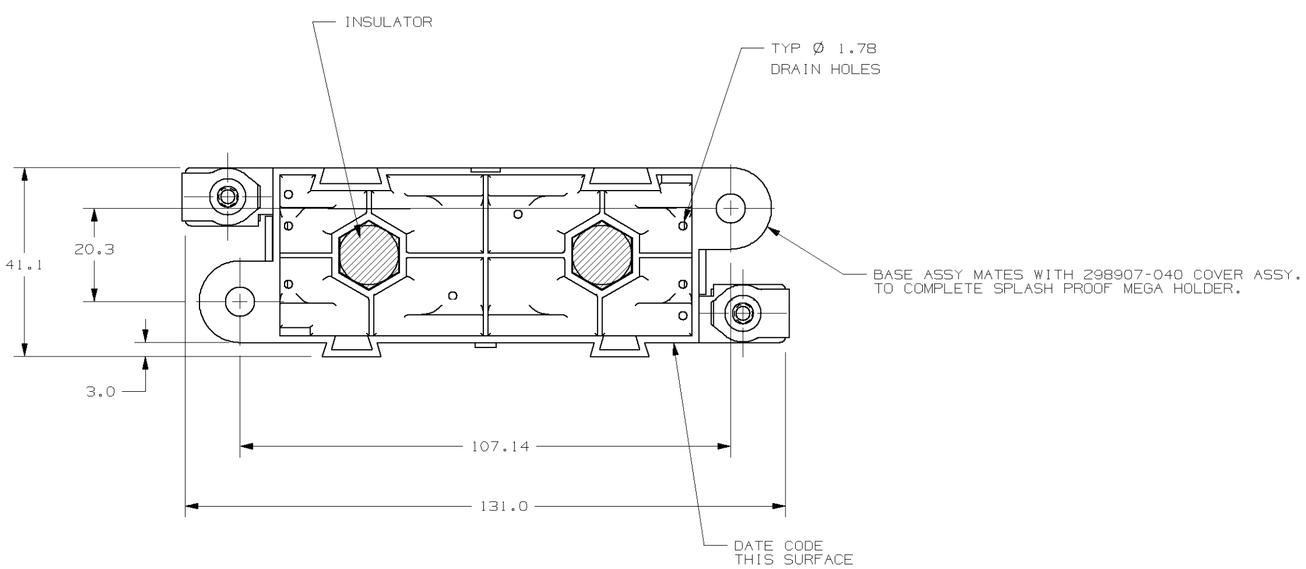

NOTES:

1. MATERIAL:

   BODY - GLASS FILLED NYLON 6/6
   COLOR - BLACK

   M8 THREADED STUDS - STEEL; FINISH PER SPEC. S36

   M8 NUTS - STEEL; FINISH PER SPEC. S36

   GROMMETS - SILICONE: BLACK

2. 250 AMP. MAX. RATING AT 125°C
3. FOR PART RECYCLING:
   CODE TO READ: PA66+GF30
4. BOTH TOP ENDS OF GROMMETS MUST BE EVEN WITH TOP OF THE BASE SIDE AFTER ASSEMBLY.

NO	COMPONENT NO	DESCRIPTION	QTY/M	U/M

BILL OF MATERIAL

UNLESS OTHERWISE SPECIFIED, DIMENSIONS ARE IN MILLIMETERS. DIMENSIONS IN BRACKETS [ ] ARE INCHES

UNLESS OTHERWISE SPECIFIED, DIMENSIONS DO NOT INCLUDE PLATING.

◎ DENOTES CRITICAL CHARACTERISTICS.

CPK DENOTES CPK DIMENSIONS, -MINIMUM CPK VALUE 1.33

ST DENOTES A CHARACTERISTIC THAT PROVIDES AN INDICATION OF PROCESS PERFORMANCE. PROCEDURE FOR MEASUREMENT AND TRACKING TO BE DEFINED IN LITTELFUSE INSPECTION INSTRUCTIONS

CP DENOTES CP DIMENSIONS, -MINIMUM CP VALUE MUST BE WITHIN THE DIMENSIONAL LIMITATIONS SHOWN ON DRAWING AND INITIALLY LOCATED TO ALLOW FOR MAXIMUM TOOL LIFE

COPIES TO

1	9	18
2	10	19
3	12	20
4	13	21
5	14	23
6	15	33
7	16	43
8	17	53

MATL SPEC

FINISH

DRW	DATE	SCALE
PJM	10/27/00	1:1
CHK	DATE	SUPER DR
APPD	DATE	FINSH GOOD WT GRAMS/PIECE

TOLERANCE UNLESS OTHERWISE SPECIFIED
ONE PLACE DEC +/-.3
TWO PLACE DEC +/-.25
THREE PLACE DEC +/-.100
ANGULAR +/-1°

3RD ANGLE PROJECTION

TITLE SPLASH PROOF MEGA HOLDER BASE ASSY

METRIC

Littelfuse®
DES PLAINES, ILLINOIS 60016

REVISION	DRWG. NO.	OUTLINE
B	298907-030	

CAD GENERATED DRAWING - NO PENCIL CHANGES ALLOWED