THIS DRAWING AND THE INFORMATION CONTAINED WITHIN IT ARE CONFIDENTIAL AND MAY NOT BE COPIED OR DISCLOSED WITHOUT THE WRITTEN PERMISSION OF LITTELFUSE.

REVISIONS

REV.	DESCRIPTION	DATE	DESIGNED	APPROVED
A	First issue of outline drawing	22-May-20	L.Dal Molin	M.Tinto

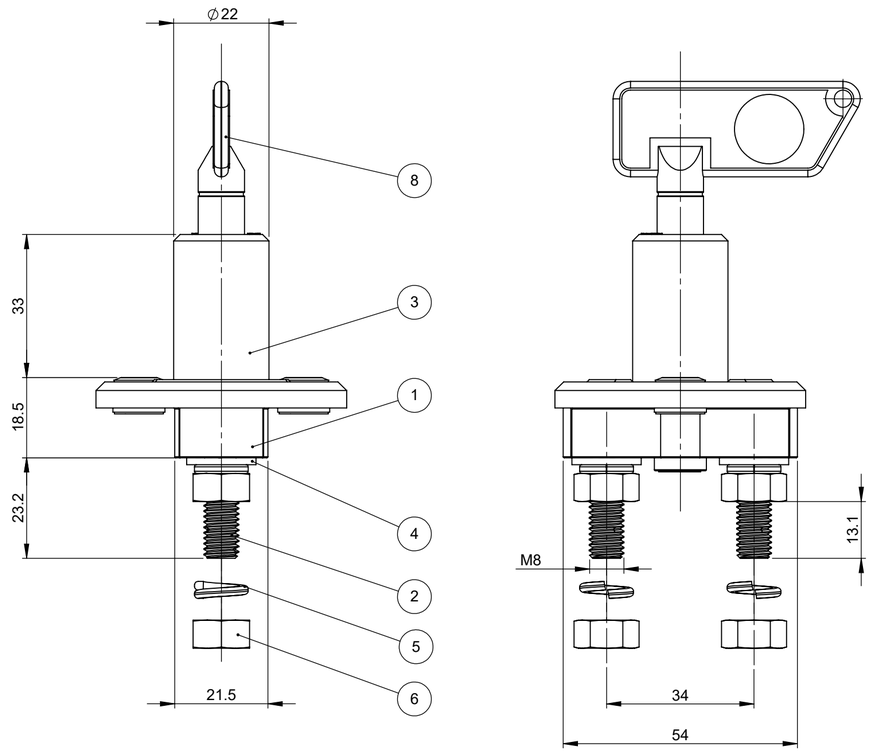

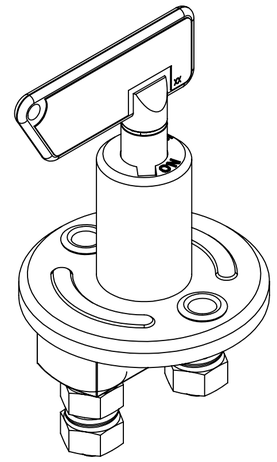

SCALE 1:1

POS.	DESCRIPTION	MATERIAL	QTY.	U/M
8	Key no logo red complete		1	EA
7	Eyelet	Iron	2	EA
6	Nut M8	Brass	4	EA
5	Spring washer	Bronze	4	EA
4	Washer Te 8.4x16		2	EA
3	Upper body cam double	Polyamide	1	EA
2	Power stud	Copper	2	EA
1	Lower body cont.-holder hole	Polyamide	1	EA

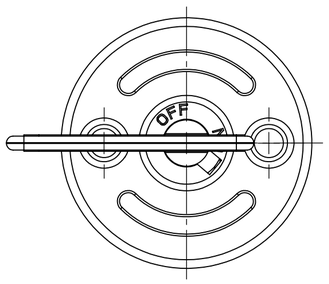

CLOSED CONTACT

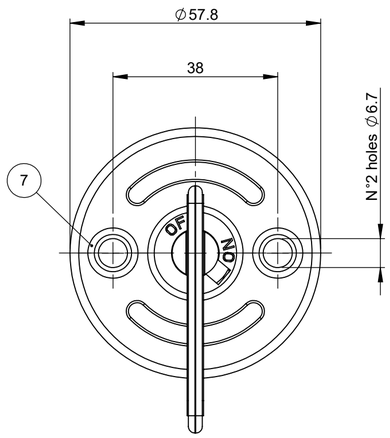

OPEN CONTACT

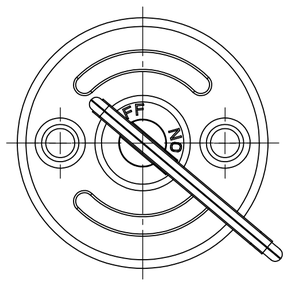

PLUGGING IN-PULL OUT KEY

CHARACTERISTICS AND PRESCRIPTIONS

-Rated voltage: 14V ÷ 28 V
-Maximum direct current: 100A
-Maximum short time current: 500A for 5sec at 23°C
-Number of electrical operations: 5000
-Number of mechanical operations: 5000
-Tightening torque M8 nuts provided in the kit: 6±1Nm
-Tightening torque M6 nuts: 3.5±0.5 Nm

Spring washer, Nut M8 and key are provided in the kit

SAP drawing number:

Material and treatments:

DIMENSIONS AND TOLERANCES IN MILLIMETERS, DEFINED ACCORDING TO ISO 1101-2017.

linear dimensions						
0,5 3	>3 6	>6 30	>30 120	>120 400	>400 1000	>1000 2000
±0,2	±0,3	±0,5	±0,8	±1,2	±2	±3

angle (for range of lengths)			
up to 10	>10 50	>50 120	>120 400
±1°30'	±1°	±0°30'	±0°15'

●	FIT/ FUNCTION CRITICAL CHARACTERISTICS SYMBOL
<S>	SAFETY/ COMPLIANCE CRITICAL CHARACTERISTICS SYMBOL
CPK	DENOTES CPK DIMENSIONS MINIMUM CPK VALUE
ST	DENOTES A CHARACTERISTIC THAT PROVIDES AN INDICATION OF PROCESS PERFORMANCE.PROCEDURE FOR MEASUREMENTAND TRACKINGTO BE DEFINED IN LITTELFUSE INSPECTION INSTRUCTIONS
CP	DENOTES CP DIMENSIONS, -MINIMUM CP VALUE MUST BE WITHIN THE DIMENSIONAL LIMITATIONS SHOWN ON DRAWING AND INITIALLY LOCATED TO ALLOW FOR MAXIMUM TOOL LIFE

	NAME	DATE
DRAWN	L. Dal Molin	04-Apr-19
CHECKED	-	-
	-	-
	-	-

Littelfuse
Expertise Applied | Answers Delivered

FORM NO: CVP-PE40-0013 REV A

FIRST ANGLE PROJECTION

TITLE
BATTERY MAIN SWITCH

SIZE: A2 | DWG. NO. OUTLINE OL-08098700 | REV. A

DO NOT SCALE DRAWING | SCALE 1:1 | SHEET 1 OF 1