THIS DRAWING AND THE INFORMATION CONTAINED WITHIN IT ARE CONFIDENTIAL AND MAY NOT BE COPIED OR DISCLOSED WITHOUT THE WRITTEN PERMISSION OF LITTELFUSE.

REVISIONS				
ZONE	REV.	DESCRIPTION	DATE	APPROVED
	A	GCF#524671 INITIAL RELEASE	JUL./28/2021	D. ZHANG

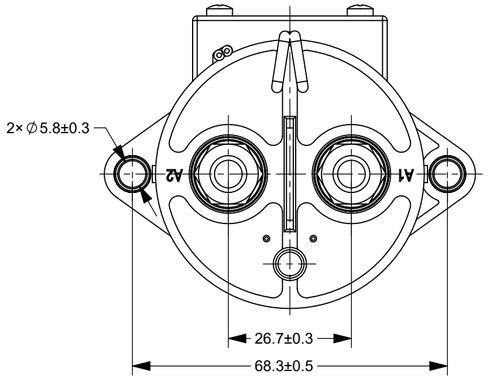

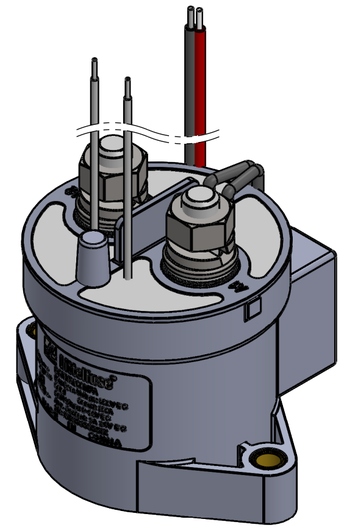

SCHEMATIC CIRCUIT DIAGRAM

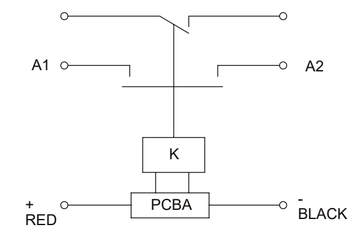

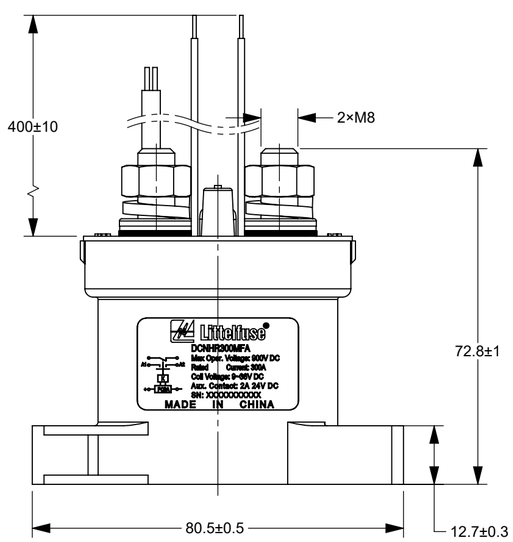

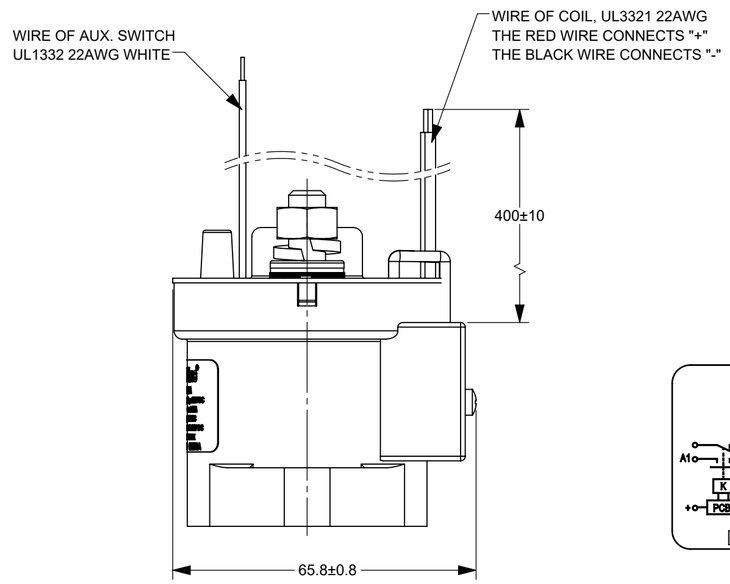

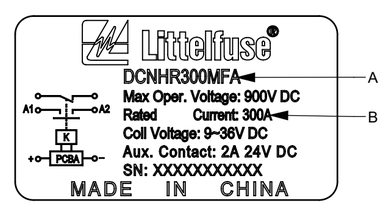

SCALE 2:1

TABLE 1		
MAX OPER. VOLTAGE		900V DC
RATED CONTACT CURRENT	DCNHR150MFA	150A
	DCNHR200MFA	200A
	DCNHR250MFA	250A
	DCNHR300MFA	300A
COIL VOLTAGE		9~36V DC
OPERATING VOLTAGE IN COLD STATE @ (23±5)°C	PICK-UP	9V MAX
	DROP-OUT	6V MIN
OPERATE TIME		25ms
CONTACT BOUNCE TIME		7ms
RELEASE TIME		12ms
MAIN CONTACT RESISTANCE(@ 20A)		≤2mΩ
AUXILIARY CONTACT RESISTANCE(@ 100mA)		≤500mΩ
INSULATION RESISTANCE @ 500 V (INITIAL)		≥100MΩ
DIELECTRIC STRENGTH (LEAKAGE CURRENT≤1 mA)		2200V AC, 1 MINUTE(1000V AC MINUTE, BETWEEN THE AUXILIARY CONTACTS)
ELECTRIC LIFE	DCNHR150MFA	5000 CYCLES (150A @ 450V DC)
	DCNHR200MFA	3500 CYCLES (200A @ 450V DC)
	DCNHR250MFA	1500 CYCLES (250A @ 450V DC)
	DCNHR300MFA	600 CYCLES (300A @ 450V DC)
MECHANICAL LIFE (NO LOAD, CYCLES)		200,000
WORKING DUTY		CONTINUOUS

TABLE 2				
NO.	PN	"A"	"B"	REMARK
1	DCNHR150MFA	DCNHR150MFA	Rated Current: 150A	
2	DCNHR200MFA	DCNHR200MFA	Rated Current: 200A	
3	DCNHR250MFA	DCNHR250MFA	Rated Current: 250A	
4	DCNHR300MFA	DCNHR300MFA	Rated Current: 300A	

NOTES:
1. ALL DIMENSIONS ARE REFERENCE ONLY.
2. SEE TABLE 2 FOR NAME PLATE AND PNs
3. PRODUCT TYPE: SPST-NO, NON-POLAR CONTACTOR WITH AUXILIARY CONTACT; AUXILIARY CONTACT: SPST-NO.
4. MATERIALS AND FINISH:
4.1 HOUSING: THERMOPLASTIC PLASTICS.
4.2 CONTACTS: COPPER ALLOY.
4.3 CONTACT STUDS: COPPER ALLOY.
4.4 COIL TERMINALS: XLPE INSULATION WIRE(HALOGEN FREE) UL3321 22AWG.
5. MAIN CONTACT M8 STUD, TORQUE: 8~12N•m.
6. MOUNTING: M5 BOLT, RECOMMENDED TORQUE 1.8 N•m ~ 3.5 N•m.
7. CONTACTOR PARAMETERS ARE SHOWN IN TABLE 1.
8. THE COIL OF THE CONTACTOR IS POLAR, SO THE CONNECTION OF THE COIL SHOULD BE OPERATED ACCORDING TO THE SCHEMATIC CIRCUIT DIAGRAM.

DIMENSIONS ARE SHOWN IN MILLIMETERS. DIMENSIONS AND TOLERANCES ARE DEFINED ACCORDING TO ANSI/ASME Y14.5-1994.

PER CHI-NPD20-0008 PROCEDURE

●	FIT/ FUNCTION CRITICAL CHARACTERISTICS
<S>	SAFETY/ COMPLIANCE CRITICAL CHARACTERISTICS SYMBOL
CPK	DENOTES CPK DIMENSIONS MINIMUM CPK VALUE
ST	DENOTES A CHARACTERISTIC THAT PROVIDES AN INDICATION OF PROCESS PERFORMANCE.PROCEDURE FOR MEASUREMENTAND TRACKINGTO BE DEFINED IN LITTELFUSE INSPECTION INSTRUCTIONS
CP	DENOTES CP DIMENSIONS. -MINIMUM CP VALUE MUST BE WITHIN THE DIMENSIONAL LIMITATIONS SHOWN ON DRAWING AND INITIALLY LOCATED TO ALLOW FOR MAXIMUM TOOL LIFE

	NAME	DATE
DRAWN	JY. SHI	JUL./15/2021
CHECKED	J. LI	JUL./21/2021
	-	-
	-	-

FORM NO: CVP-PE40-0005 REV B

THIRD ANGLE PROJECTION

DO NOT SCALE DRAWING

Littelfuse
Expertise Applied | Answers Delivered

TITLE DCNHR 9-36V COIL NON-POLAR CONTACTOR WITH AUXILIARY CONTACT

SIZE	DWG. NO.		REV.
C	OUTLINE	OL-DCNHR300MFA,CHART	A

SCALE 1:1 SHEET 1 OF 1