PART NUMBER	BASE ①	BOLT ②	JAM NUT ③	COVER OPENING ④	COVER OPENING ⑤	FUSE ⑥	FUSE ⑦	WASHER ⑧	NUT LOCATION ⑨	BUSS BAR LOCATED BETWEEN BOLT #'s ⑩	TETHER ⑪
02982001ZXT	YES	YES	YES	A B C D E F	A B C D E F	0298150.ZXEH	0298150.ZXEH	YES	2 3 4	2 - 3	YES
02982002ZXT	YES	YES	YES	A C F	A B C E	0298175.ZXEH	0298175.ZXEH	NONE	3	2 - 3	YES
02982003ZXT	YES	YES	YES	D E F	A D	0298100.ZXEH	0298175.ZXEH	NONE	1	NONE	YES
02982004ZXT	YES	YES	YES	A B	B C F	0298175.ZXEH	NONE	NONE	1	1 - 4	YES

LTR	DATE	REVISION	CHK	APD
A	09/11/13	509475GCA-RELEASED OPL		
B	02/17/14	510127ECA-REPLACE NOTE FROM: FOR BUSBAR 882-786 ORIENTATION TAB MUST BE BY BOLT No 2 TO: BUSS BAR ORIENTATION CAN BE IN ANY DIRECTION OPL		
C	06/19/14	510654ECA-CHANGE DIMENSION FROM 38.2 TO 38.5 ADD REF OPL		

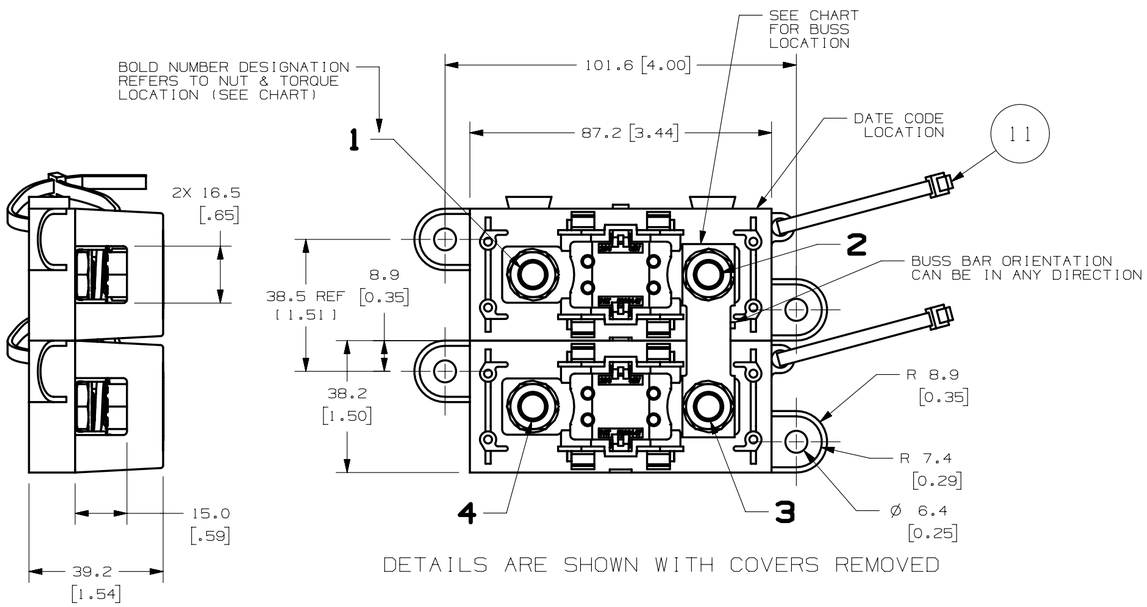

DETAILS ARE SHOWN WITH COVERS REMOVED

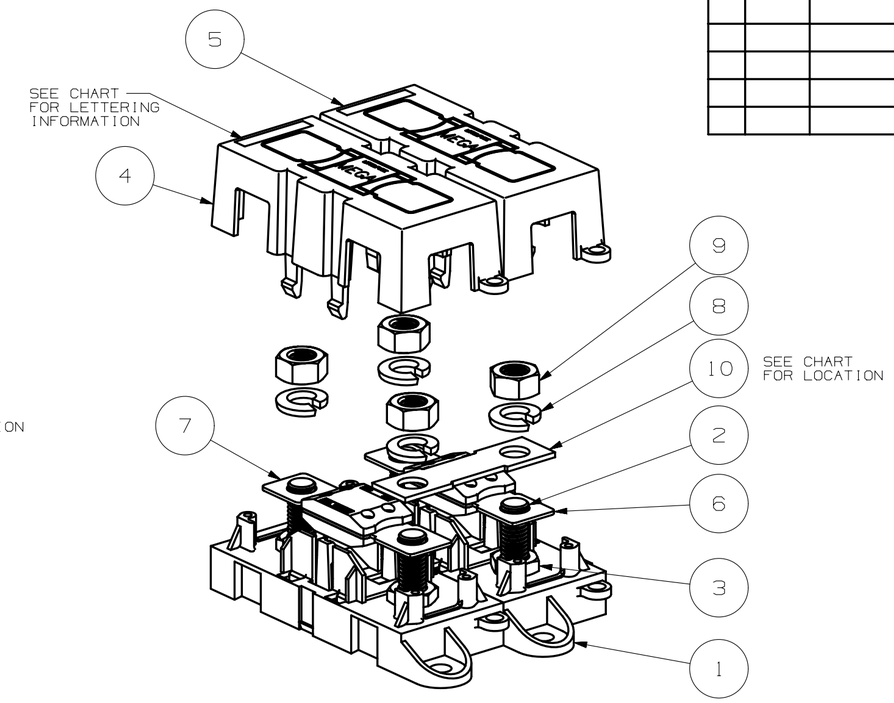

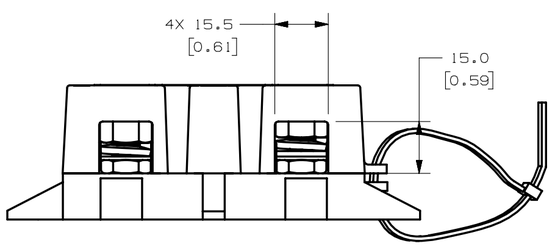

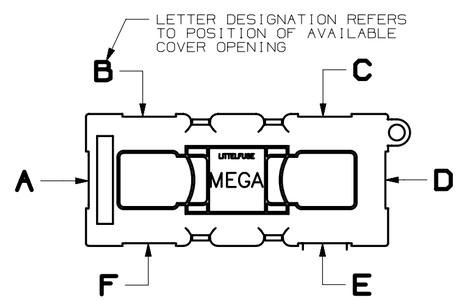

DETAIL OF OPENINGS ON COVER (SEE CHART)

GENERAL NOTES:

1. COVER RETENTION TEST: MINIMUM FORCE OF 2 LBS. IS REQUIRED TO REMOVE COVER WHEN IT IS SUSPENDED UPSIDE DOWN. FORCE SHALL BE APPLIED THROUGH THE INNER HOLES (2) IN BASE. USE FIXTURE #T-C403 TO SUPPORT PART.

2. TORQUE APPLIED TO NUT
   TORQUE REQUIREMENTS FOR THE HEX NUT USED TO SECURE THE BUSSBAR OR THE CUSTOMER RING TERMINAL TO THE MEGA FUSE TO BE:
   8mm NUT - 12-18 NEWTON METERS [106-159 IN-LBS]

3. DUAL HOLDER MEETS L/F VALIDATION TEST SPEC. VS-005005.

4. MATERIALS:
   * BODY - GLASS FILLED THERMOPLASTIC
     COLOR - BLACK
   * COVER - THERMOPLASTIC
     COLOR - BLACK
   * WIRE TIE - THERMOPLASTIC
     COLOR - BLACK
   * STUDS & NUTS - M8 X 1.25 STEEL
     ZINC PLATE WITH TRIVALENT CHROMATE, LEACHED AND SEALED, INTEGRAL TORQUE CONTROL LUBRICANT FINISH
     (MEETS 96 HR. ASTM STD. B-117 SALT SPRAY REQ.)
   * PREVAILING TORQUE ELEMENT - NYLON, COLOR OPTIONAL

METRIC

NO	COMPONENT NO	DESCRIPTION	QTY/M	U/M
-				
-				
-				

BILL OF MATERIAL

UNLESS OTHERWISE SPECIFIED, DIMENSIONS ARE IN MILLIMETERS. DIMENSIONS IN BRACKETS [ ] ARE INCHES

UNLESS OTHERWISE SPECIFIED, DIMENSIONS DO NOT INCLUDE PLATING.

◎ DENOTES CRITICAL CHARACTERISTICS.

CPK DENOTES CPK DIMENSIONS, -MINIMUM CPK VALUE

ST DENOTES A CHARACTERISTIC THAT PROVIDES AN INDICATION OF PROCESS PERFORMANCE. PROCEDURE FOR MEASUREMENT AND TRACKING TO BE DEFINED IN LITTELFUSE INSPECTION INSTRUCTIONS

CP DENOTES CP DIMENSIONS, -MINIMUM CP VALUE MUST BE WITHIN THE DIMENSIONAL LIMITATIONS SHOWN ON DRAWING AND INITIALLY LOCATED TO ALLOW FOR MAXIMUM TOOL LIFE

COPIES TO: 1 9 18 / 2 10 19 / 3 12 20 / 4 13 21 / 5 14 23 / 6 15 33 / 7 16 43 / 8 17 53

MATL SPEC

FINISH

DRW OPL	DATE 09/11/13	SCALE 1:0.75
CHK	DATE	SUPER DR
APPD	DATE	FINSH GOOD WT GRAMS/PIECE

TOLERANCE UNLESS OTHERWISE SPECIFIED
ONE PLACE DEC +/-.3 — THREE PLACE DEC +/-.100
TWO PLACE DEC +/-.25 — ANGULAR +/-1°

3RD ANGLE PROJECTION

TITLE: DUAL MEGAFUSE HOLDER

Littelfuse® DES PLAINES, ILLINOIS 60016

REVISION: C — DRWG. NO. 02982000ZXT — OUTLINE

CAD GENERATED DRAWING – NO PENCIL CHANGES ALLOWED