THIS DRAWING AND THE INFORMATION CONTAINED WITHIN IT ARE CONFIDENTIAL AND MAY NOT BE COPIED OR DISCLOSED WITHOUT THE WRITTEN PERMISSION OF LITTELFUSE.

REVISIONS

REV.	DESCRIPTION	DATE	GCF / ECR	DESIGNED	APPROVED
A	Initial Release	1-Feb-23		L.Dal Molin	M.Tinto

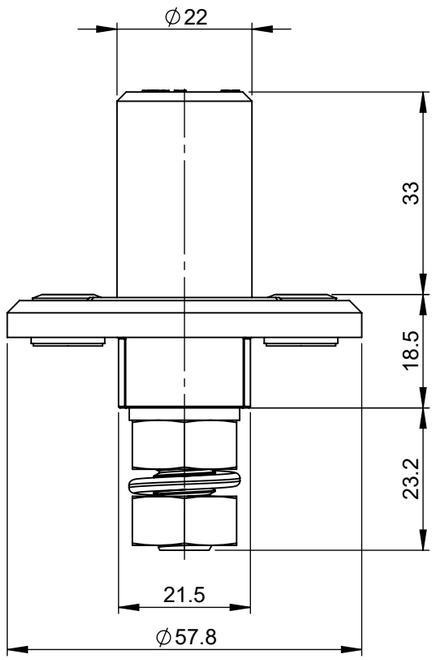

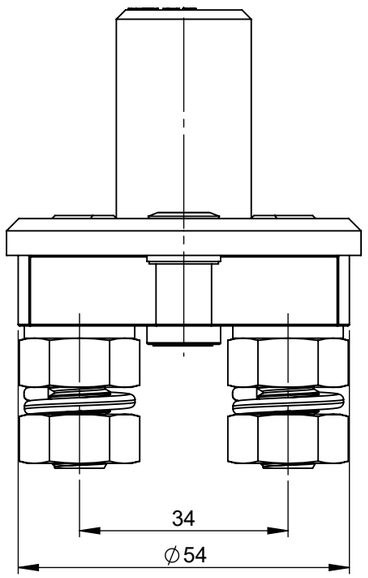

ELECTRICAL DIAGRAM

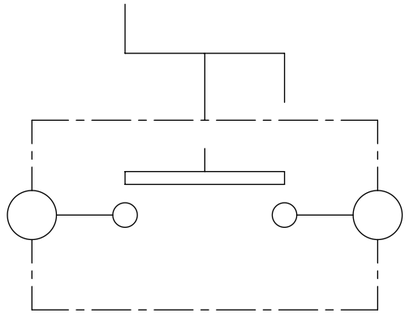

CHARACTERISTICS
- Nominal voltage: 24V max
- Maximum continuos current: 150A
- Maximum current: 1000A for 5 sec.
- Tightening torque M10 nuts: 7±1 Nm

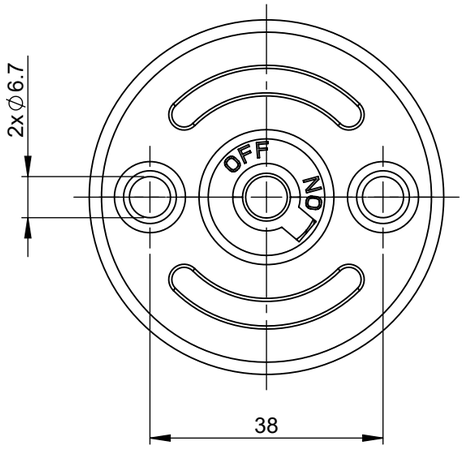

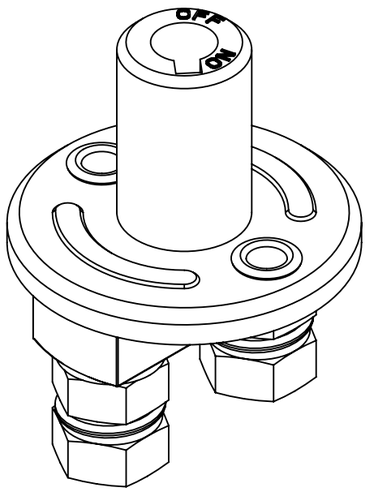

DIMENSIONS AND TOLERANCES IN MILLIMETERS, DEFINED ACCORDING TO ISO 1101-2017.

linear dimensions

0,5 3	>3 6	>6 30	>30 120	>120 400	>400 1000	>1000 2000
±0,2	±0,3	±0,5	±0,8	±1,2	±2	±3

angle (for range of lengths)

up to 10	>10 50	>50 120	>120 400
±1°30'	±1°	±0°30'	±0°15'

●	FIT/ FUNCTION CRITICAL CHARACTERISTICS SYMBOL
<S>	SAFETY/ COMPLIANCE CRITICAL CHARACTERISTICS SYMBOL
CPK	DENOTES CPK DIMENSIONS MINIMUM CPK VALUE
⟨ST⟩	DENOTES A CHARACTERISTIC THAT PROVIDES AN INDICATION OF PROCESS PERFORMANCE.PROCEDURE FOR MEASUREMENTAND TRACKINGTO BE DEFINED IN LITTELFUSE INSPECTION INSTRUCTIONS
CP	DENOTES CP DIMENSIONS, -MINIMUM CP VALUE MUST BE WITHIN THE DIMENSIONAL LIMITATIONS SHOWN ON DRAWING AND INITIALLY LOCATED TO ALLOW FOR MAXIMUM TOOL LIFE

	NAME	DATE
DRAWN	L. Dal Molin	1 Feb 2023
CHECKED	-	-
	-	-
	-	-

FORM NO; CVP-PE40-0013 REV A

FIRST ANGLE PROJECTION

Littelfuse®
Expertise Applied | Answers Delivered

TITLE
BMS IGC-150 (NO KEY)

SIZE: A3 | DWG. NO. OUTLINE OL-08098781 | REV. A

DO NOT SCALE DRAWING | SCALE 1:1 | SHEET 1 OF 1