REVISION		
REV	DATE	DESCRIPTION
A	9/19/18	519868GCP - RELEASE PER EM3052 MRY
B	10/26/20	522955ECP/D - ADD MOUNTING HOLE DIMENSIONS MRY

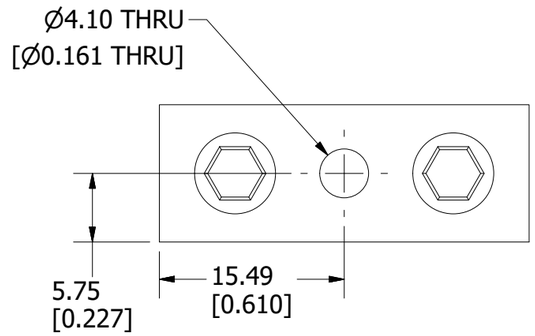

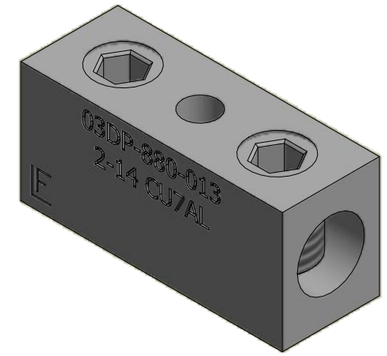

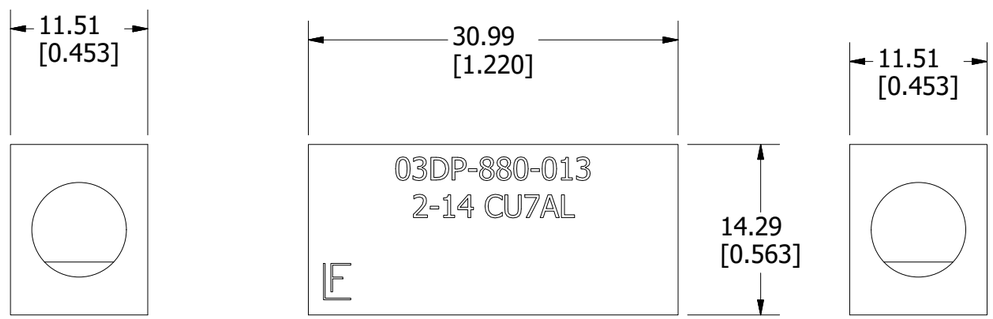

SPECIFICATIONS:

VOLTAGE RATING: 600V

AMPERE RATING: 115 AMP CU; 90 AMP AL

SUGGESTED TORQUE (LINE): 5.6 N-m (50 IN-LBS) 2-6 AWG
4.5 N-m (40 IN-LBS) 8-14 AWG

SUGGESTED TORQUE (LOAD): 5.6 N-m (50 IN-LBS) 2-6 AWG
4.5 N-m (40 IN-LBS) 8-14 AWG

WIRE RANGE (LINE): 2-14 AWG Cu/Al
SOLID/STRANDED

WIRE RANGE (LOAD): 2-14 AWG Cu/Al
SOLID/STRANDED

FASTENER: M4 (#8)

APPROVALS: cULus (FILE NO. E502265)

●	DENOTES CRITICAL CHARACTERISTICS.
CPK	DENOTES CPK DIMENSIONS, -MINIMUM CPK VALUE
ST	DENOTES A CHARACTERISTIC THAT PROVIDES AN INDICATION OF PROCESS PERFORMANCE. PROCEDURE FOR MEASUREMENT AND TRACKING TO BE DEFINED IN LITTELFUSE INSPECTION INSTRUCTIONS.
CP	DENOTES CP DIMENSIONS, -MINIMUM CP VALUE MUST BE WITHIN THE DIMENSIONAL LIMITATIONS SHOWN ON DRAWING AND INITIALLY LOCATED TO ALLOW FOR MAXIMUM TOOL LIFE.

B

MATL SPEC		FINISH	
DRW myork	DATE 8/17/2018	SCALE NTS	FINISH GOOD WT GRAMS/PIECE

UNLESS OTHERWISE SPECIFIED, DIMENSIONS ARE IN MILLIMETERS, DIMENSIONS IN BRACKETS [ ] ARE INCHES DIMENSIONING AND DO NOT INCLUDE PLATING. TOLERANCING TO BE INTERPRETED IN ACCORDANCE WITH ANSI Y14.5M-1994

3RD ANGLE PROJECTION

TITLE WCL001 OUTLINE

Littelfuse®
CHICAGO, ILLINOIS 60631

REVISION	DRWG NO.	SHEET 1 OF 1
B	OL-WCL001	

REVISION		
REV	DATE	DESCRIPTION
A	9/19/18	519868GCP - RELEASE PER EM3052 MRY
B	10/26/20	522955ECP/D - ADD MOUNTING HOLE DIMENSIONS MRY

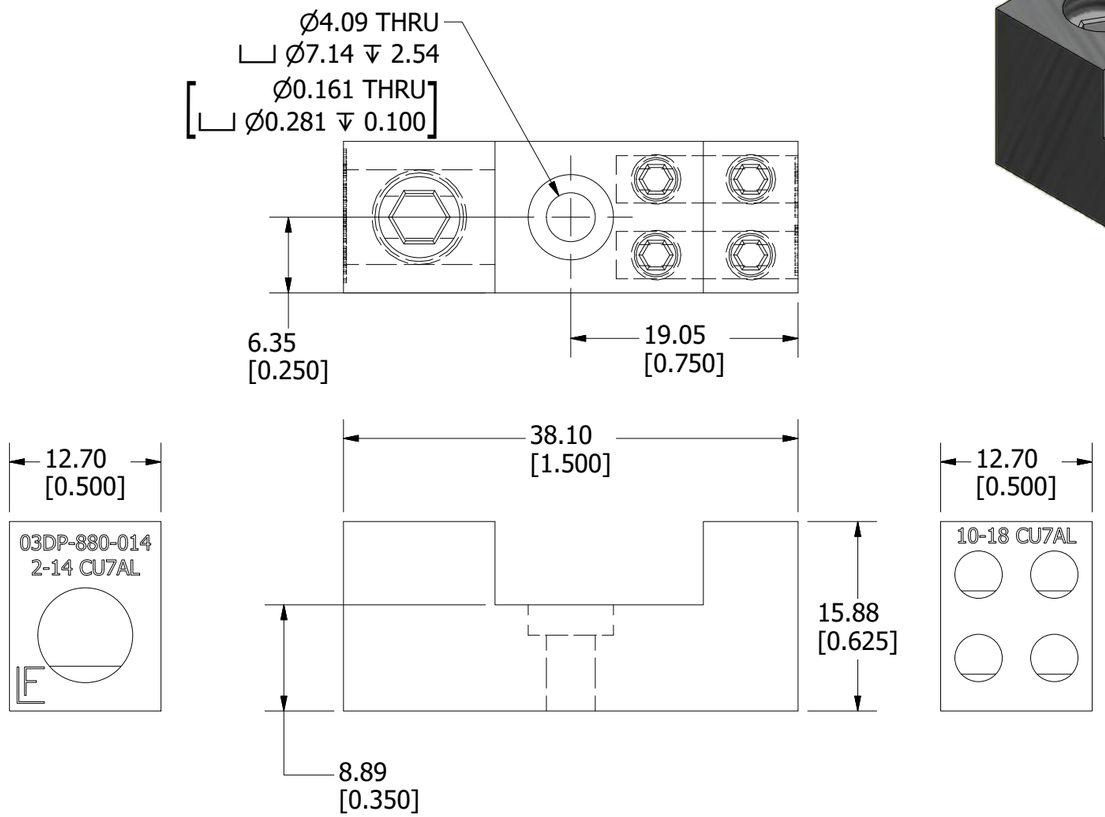

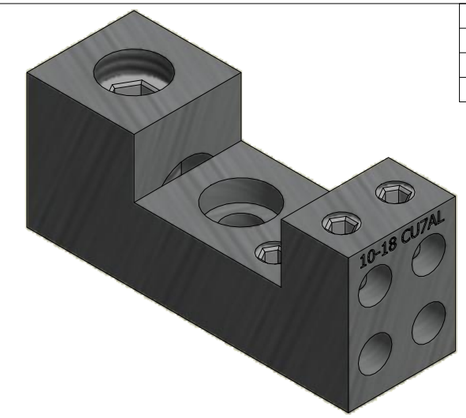

SPECIFICATIONS:

VOLTAGE RATING: 600V

AMPERE RATING: 115 AMP CU; 90 AMP AL

SUGGESTED TORQUE (LINE): 5.6 N-m (50 IN-LBS) 2-6 AWG
4.5 N-m (40 IN-LBS) 8-14 AWG

SUGGESTED TORQUE (LOAD): 0.8 N-m (7 IN-LBS) 10-16 AWG
0.6 N-m (5 IN-LBS) 18 AWG

WIRE RANGE (LINE): 2-14 AWG Cu/Al
SOLID/STRANDED

WIRE RANGE (LOAD): 10-18 AWG Cu/Al
SOLID/STRANDED

FASTENER: M4 (#8)

APPROVALS: cULus (FILE NO. E502265)

●	DENOTES CRITICAL CHARACTERISTICS.
CPK	DENOTES CPK DIMENSIONS, -MINIMUM CPK VALUE
⟨ST⟩	DENOTES A CHARACTERISTIC THAT PROVIDES AN INDICATION OF PROCESS PERFORMANCE. PROCEDURE FOR MEASUREMENT AND TRACKING TO BE DEFINED IN LITTELFUSE INSPECTION INSTRUCTIONS.
CP	DENOTES CP DIMENSIONS, -MINIMUM CP VALUE MUST BE WITHIN THE DIMENSIONAL LIMITATIONS SHOWN ON DRAWING AND INITIALLY LOCATED TO ALLOW FOR MAXIMUM TOOL LIFE.

B

MATL SPEC		FINISH	
DRW myork	DATE 8/17/2018	SCALE NTS	FINISH GOOD WT GRAMS/PIECE

UNLESS OTHERWISE SPECIFIED, DIMENSIONS ARE IN MILLIMETERS, DIMENSIONS IN BRACKETS [ ] ARE INCHES DIMENSIONING AND DO NOT INCLUDE PLATING. TOLERANCING TO BE INTERPRETED IN ACCORDANCE WITH ANSI Y14.5M-1994

3RD ANGLE PROJECTION

TITLE WCL002 OUTLINE

Littelfuse®
CHICAGO, ILLINOIS 60631

REVISION B

DRWG NO. OL-WCL002

SHEET 1 OF 1

REVISION		
REV	DATE	DESCRIPTION
A	9/19/18	519868GCP - RELEASE PER EM3052 MRY
B	10/26/20	522955ECP/D - ADD MOUNTING HOLE DIMENSIONS MRY

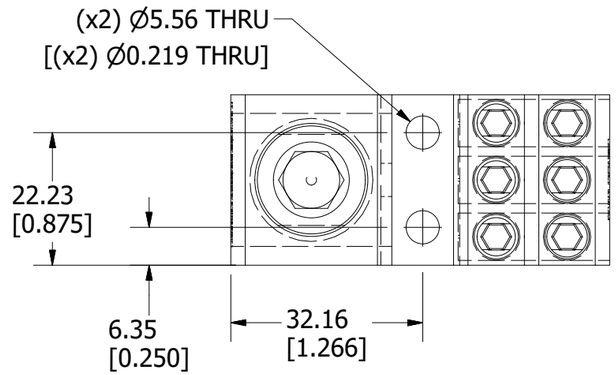

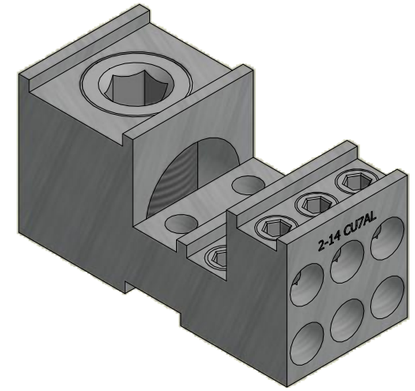

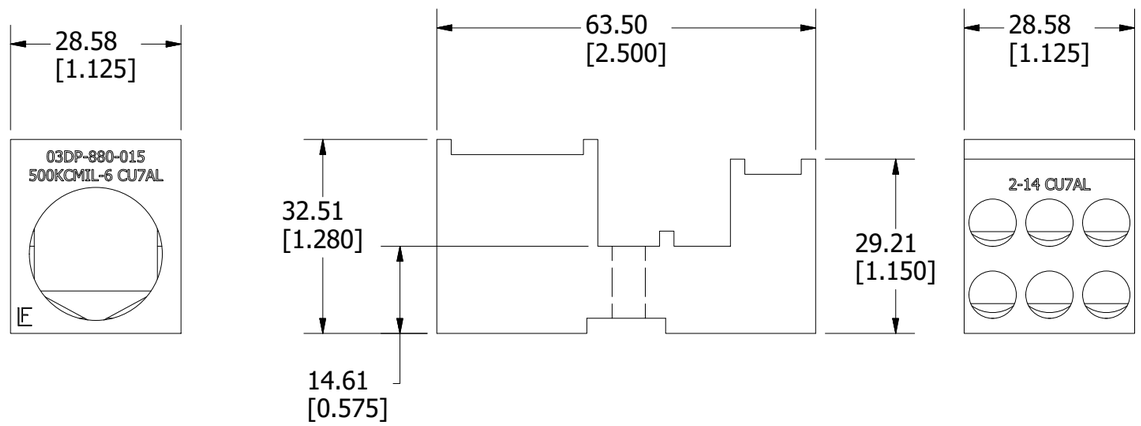

SPECIFICATIONS:

VOLTAGE RATING: 600V

AMPERE RATING: 380 AMP CU; 310 AMP AL

SUGGESTED TORQUE (LINE): 42.4 N-m (375 IN-LBS)

SUGGESTED TORQUE (LOAD): 5.6 N-m (50 IN-LBS) 2-16 AWG
4.5 N-m (40 IN-LBS) 8-14 AWG

WIRE RANGE (LINE): 500MCM - 6 AWG Cu/Al
SOLID/STRANDED

WIRE RANGE (LOAD): 2-14 AWG Cu/Al
SOLID/STRANDED

FASTENER: M5 (#10)

APPROVALS: cULus (FILE NO. E502265)

●	DENOTES CRITICAL CHARACTERISTICS.
CPK	DENOTES CPK DIMENSIONS, -MINIMUM CPK VALUE
ST	DENOTES A CHARACTERISTIC THAT PROVIDES AN INDICATION OF PROCESS PERFORMANCE. PROCEDURE FOR MEASUREMENT AND TRACKING TO BE DEFINED IN LITTELFUSE INSPECTION INSTRUCTIONS.
CP	DENOTES CP DIMENSIONS, -MINIMUM CP VALUE MUST BE WITHIN THE DIMENSIONAL LIMITATIONS SHOWN ON DRAWING AND INITIALLY LOCATED TO ALLOW FOR MAXIMUM TOOL LIFE.

B

MATL SPEC		FINISH	
DRW myork	DATE 8/17/2018	SCALE NTS	FINISH GOOD WT GRAMS/PIECE

UNLESS OTHERWISE SPECIFIED, DIMENSIONS ARE IN MILLIMETERS, DIMENSIONS IN BRACKETS [ ] ARE INCHES DIMENSIONING AND DO NOT INCLUDE PLATING. TOLERANCING TO BE INTERPRETED IN ACCORDANCE WITH ANSI Y14.5M-1994

3RD ANGLE PROJECTION

TITLE WCL003 OUTLINE

Littelfuse®
CHICAGO, ILLINOIS 60631

REVISION	DRWG NO.	SHEET 1 OF 1
B	OL-WCL003	

REVISION		
REV	DATE	DESCRIPTION
A	9/19/18	519868GCP - RELEASE PER EM3052 MRY
B	10/26/20	522955ECP/D - ADD MOUNTING HOLE DIMENSIONS MRY

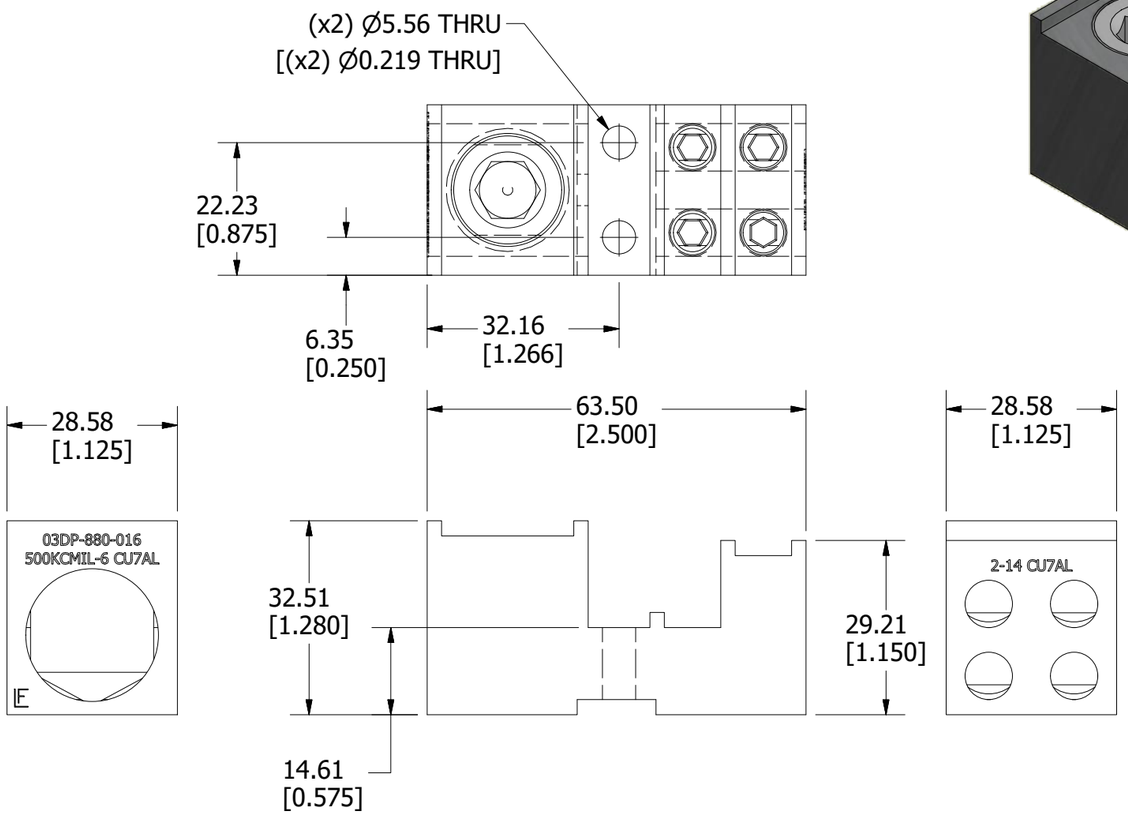

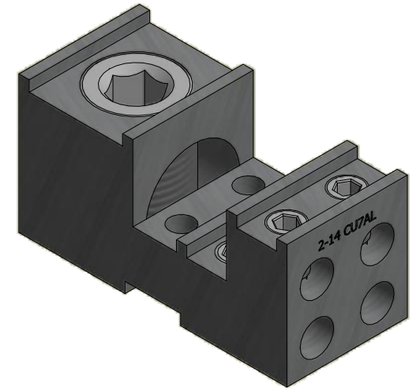

SPECIFICATIONS:

VOLTAGE RATING: 600V

AMPERE RATING: 380 AMP CU; 310 AMP AL

SUGGESTED TORQUE (LINE): 42.4 N-m (375 IN-LBS)

SUGGESTED TORQUE (LOAD): 5.6 N-m (50 IN-LBS) 2-16 AWG
4.5 N-m (40 IN-LBS) 8-14 AWG

WIRE RANGE (LINE): 500MCM - 6 AWG Cu/Al
SOLID/STRANDED

WIRE RANGE (LOAD): 2-14 AWG Cu/Al
SOLID/STRANDED

FASTENER: M5 (#10)

APPROVALS: cULus (FILE NO. E502265)

●	DENOTES CRITICAL CHARACTERISTICS.
CPK	DENOTES CPK DIMENSIONS, -MINIMUM CPK VALUE
⟨ST⟩	DENOTES A CHARACTERISTIC THAT PROVIDES AN INDICATION OF PROCESS PERFORMANCE. PROCEDURE FOR MEASUREMENT AND TRACKING TO BE DEFINED IN LITTELFUSE INSPECTION INSTRUCTIONS.
CP	DENOTES CP DIMENSIONS, -MINIMUM CP VALUE MUST BE WITHIN THE DIMENSIONAL LIMITATIONS SHOWN ON DRAWING AND INITIALLY LOCATED TO ALLOW FOR MAXIMUM TOOL LIFE.

B

MATL SPEC		FINISH	
DRW myork	DATE 8/17/2018	SCALE NTS	FINISH GOOD WT GRAMS/PIECE

UNLESS OTHERWISE SPECIFIED, DIMENSIONS ARE IN MILLIMETERS, DIMENSIONS IN BRACKETS [ ] ARE INCHES DIMENSIONING AND DO NOT INCLUDE PLATING. TOLERANCING TO BE INTERPRETED IN ACCORDANCE WITH ANSI Y14.5M-1994

3RD ANGLE PROJECTION

TITLE WCL004 OUTLINE

Littelfuse®
CHICAGO, ILLINOIS 60631

REVISION	DRWG NO.	SHEET 1 OF 1
B	OL-WCL004	

REVISION		
REV	DATE	DESCRIPTION
A	9/19/18	519868GCP - RELEASE PER EM3052 MRY
B	10/26/20	522955ECP/D - ADD MOUNTING HOLE DIMENSIONS MRY

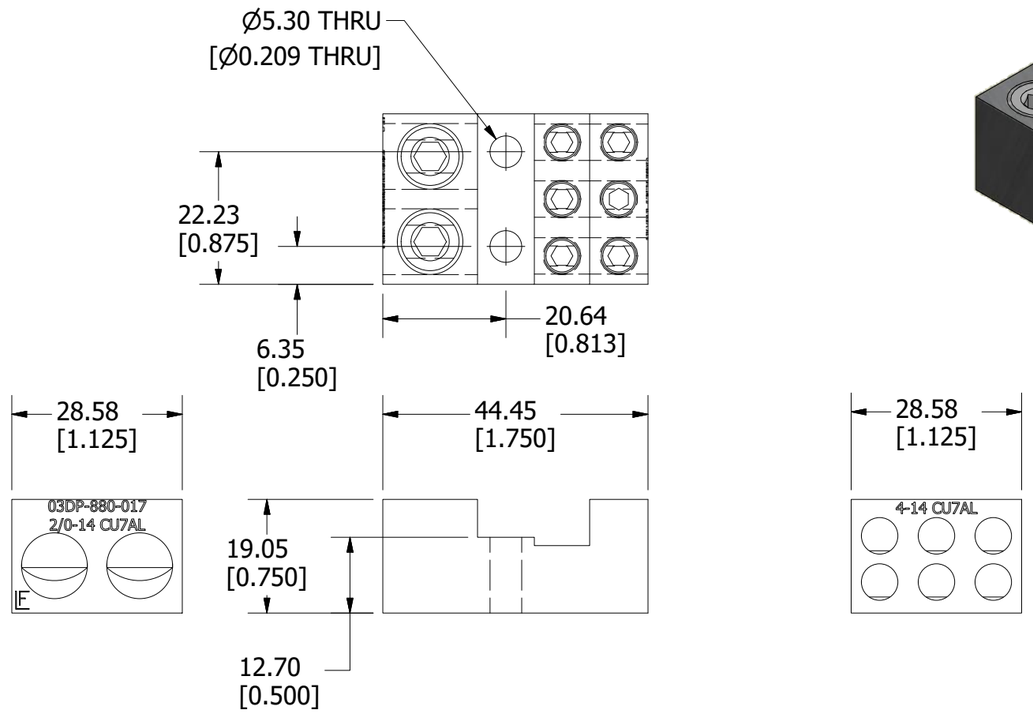

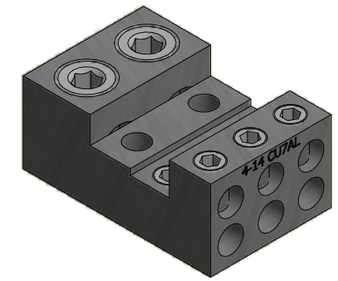

SPECIFICATIONS:

VOLTAGE RATING: 600V

AMPERE RATING: 350 AMP CU; 270 AMP AL

SUGGESTED TORQUE (LINE): 13.6 N-m (120 IN-LBS) 2/0-6 AWG
4.5 N-m (40 IN-LBS) 8-14 AWG

SUGGESTED TORQUE (LOAD): 4.0 N-m (35 IN-LBS)

WIRE RANGE (LINE): 2/0-14 AWG Cu/Al
SOLID/STRANDED

WIRE RANGE (LOAD): 4-14 AWG Cu/Al
SOLID/STRANDED

FASTENER: M5 (#10)

APPROVALS: cULus (FILE NO. E502265)

●	DENOTES CRITICAL CHARACTERISTICS.
CPK	DENOTES CPK DIMENSIONS, -MINIMUM CPK VALUE
ST	DENOTES A CHARACTERISTIC THAT PROVIDES AN INDICATION OF PROCESS PERFORMANCE. PROCEDURE FOR MEASUREMENT AND TRACKING TO BE DEFINED IN LITTELFUSE INSPECTION INSTRUCTIONS.
CP	DENOTES CP DIMENSIONS, -MINIMUM CP VALUE MUST BE WITHIN THE DIMENSIONAL LIMITATIONS SHOWN ON DRAWING AND INITIALLY LOCATED TO ALLOW FOR MAXIMUM TOOL LIFE.

B

MATL SPEC		FINISH	
DRW myork	DATE 8/17/2018	SCALE NTS	FINISH GOOD WT GRAMS/PIECE

UNLESS OTHERWISE SPECIFIED, DIMENSIONS ARE IN MILLIMETERS, DIMENSIONS IN BRACKETS [ ] ARE INCHES DIMENSIONING AND DO NOT INCLUDE PLATING. TOLERANCING TO BE INTERPRETED IN ACCORDANCE WITH ANSI Y14.5M-1994

3RD ANGLE PROJECTION

TITLE WCL005 OUTLINE

Littelfuse®
CHICAGO, ILLINOIS 60631

REVISION	DRWG NO.	SHEET 1 OF 1
B	OL-WCL005	

REVISION		
REV	DATE	DESCRIPTION
A	9/19/18	519868GCP - RELEASE PER EM3052 MRY
B	10/26/20	522955ECP/D - ADD MOUNTING HOLE DIMENSIONS MRY

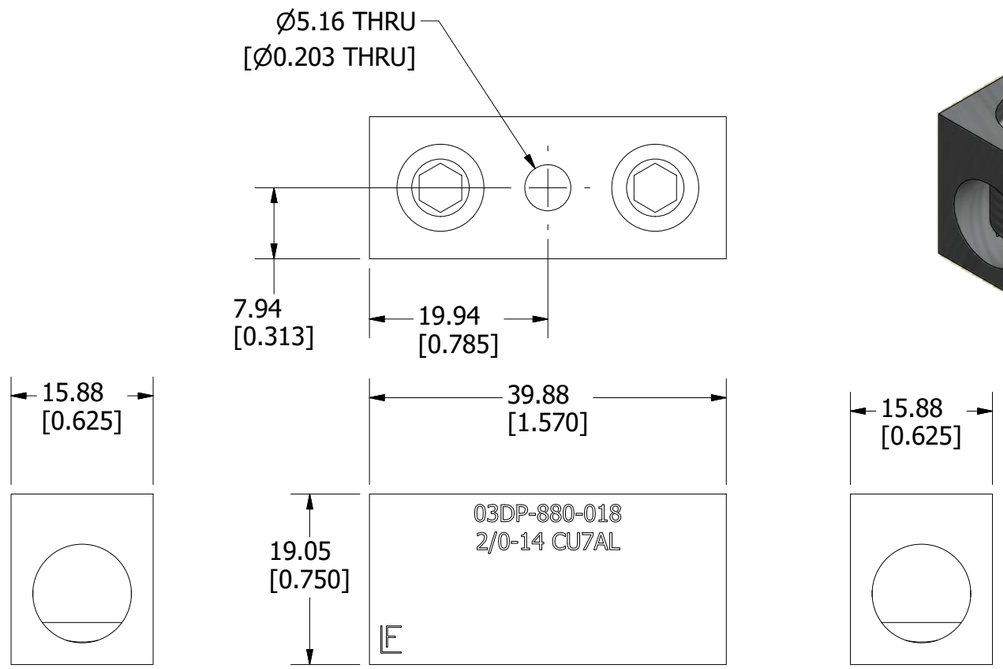

SPECIFICATIONS:

VOLTAGE RATING: 600V

AMPERE RATING: 175 AMP CU; 135 AMP AL

SUGGESTED TORQUE (LINE): 13.6 N-m (120 IN-LBS) 2/0-6 AWG
4.5 N-m (40 IN-LBS) 8-14 AWG

SUGGESTED TORQUE (LOAD): 13.6 N-m (120 IN-LBS) 2/0-6 AWG
4.5 N-m (40 IN-LBS) 8-14 AWG

WIRE RANGE (LINE): 2/0-14 AWG Cu/Al
SOLID/STRANDED

WIRE RANGE (LOAD): 2/0-14 AWG Cu/Al
SOLID/STRANDED

FASTENER: M5 (#10)

APPROVALS: cULus (FILE NO. E502265)

●	DENOTES CRITICAL CHARACTERISTICS.
CPK	DENOTES CPK DIMENSIONS, -MINIMUM CPK VALUE
ST	DENOTES A CHARACTERISTIC THAT PROVIDES AN INDICATION OF PROCESS PERFORMANCE. PROCEDURE FOR MEASUREMENT AND TRACKING TO BE DEFINED IN LITTELFUSE INSPECTION INSTRUCTIONS.
CP	DENOTES CP DIMENSIONS, -MINIMUM CP VALUE MUST BE WITHIN THE DIMENSIONAL LIMITATIONS SHOWN ON DRAWING AND INITIALLY LOCATED TO ALLOW FOR MAXIMUM TOOL LIFE.

B

MATL SPEC		FINISH	
DRW myork	DATE 8/17/2018	SCALE NTS	FINISH GOOD WT GRAMS/PIECE

UNLESS OTHERWISE SPECIFIED, DIMENSIONS ARE IN MILLIMETERS, DIMENSIONS IN BRACKETS [ ] ARE INCHES DIMENSIONING AND DO NOT INCLUDE PLATING. TOLERANCING TO BE INTERPRETED IN ACCORDANCE WITH ANSI Y14.5M-1994

3RD ANGLE PROJECTION

TITLE WCL006 OUTLINE

Littelfuse®
CHICAGO, ILLINOIS 60631

REVISION B

DRWG NO. OL-WCL006

SHEET 1 OF 1

REVISION		
REV	DATE	DESCRIPTION
A	9/19/18	519868GCP - RELEASE PER EM3052 MRY
B	10/26/20	522955ECP/D - ADD MOUNTING HOLE DIMENSIONS MRY

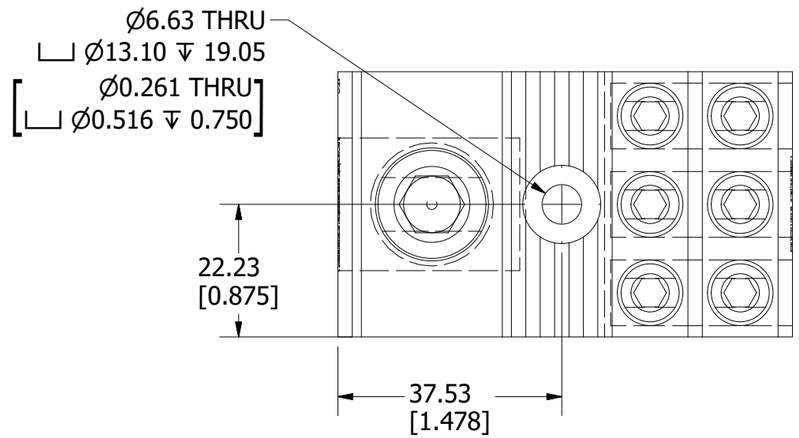

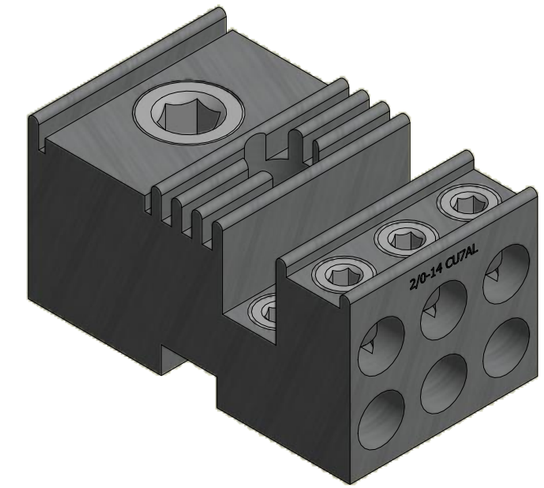

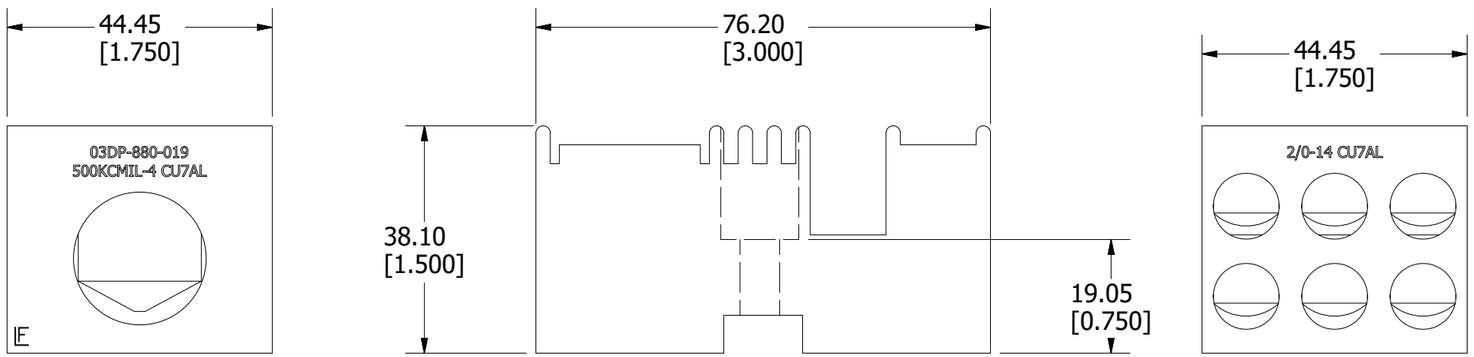

SPECIFICATIONS:

VOLTAGE RATING: 600V

AMPERE RATING: 380 AMP CU; 310 AMP AL

SUGGESTED TORQUE (LINE): 42.4 N-m (375 IN-LBS)

SUGGESTED TORQUE (LOAD): 13.6 N-m (120 IN-LBS) 2/0-6 AWG
4.5 N-m (40 IN-LBS) 8-14 AWG

WIRE RANGE (LINE): 500MCM-4 AWG Cu/Al
SOLID/STRANDED

WIRE RANGE (LOAD): 2/0-14 AWG Cu/Al
SOLID/STRANDED

FASTENER: M6 (1/4)

APPROVALS: cULus (FILE NO. E502265)

●	DENOTES CRITICAL CHARACTERISTICS.
CPK	DENOTES CPK DIMENSIONS, -MINIMUM CPK VALUE
⟨ST⟩	DENOTES A CHARACTERISTIC THAT PROVIDES AN INDICATION OF PROCESS PERFORMANCE. PROCEDURE FOR MEASUREMENT AND TRACKING TO BE DEFINED IN LITTELFUSE INSPECTION INSTRUCTIONS.
CP	DENOTES CP DIMENSIONS, -MINIMUM CP VALUE MUST BE WITHIN THE DIMENSIONAL LIMITATIONS SHOWN ON DRAWING AND INITIALLY LOCATED TO ALLOW FOR MAXIMUM TOOL LIFE.

B

MATL SPEC		FINISH	
DRW myork	DATE 8/17/2018	SCALE NTS	FINISH GOOD WT GRAMS/PIECE

UNLESS OTHERWISE SPECIFIED, DIMENSIONS ARE IN MILLIMETERS, DIMENSIONS IN BRACKETS [ ] ARE INCHES DIMENSIONING AND DO NOT INCLUDE PLATING. TOLERANCING TO BE INTERPRETED IN ACCORDANCE WITH ANSI Y14.5M-1994

3RD ANGLE PROJECTION

TITLE WCL007 OUTLINE

Littelfuse®
CHICAGO, ILLINOIS 60631

REVISION	DRWG NO.	SHEET 1 OF 1
B	OL-WCL007	

REVISION		
REV	DATE	DESCRIPTION
A	9/19/18	519868GCP - RELEASE PER EM3052 MRY
B	10/26/20	522955ECP/D - ADD MOUNTING HOLE DIMENSIONS MRY

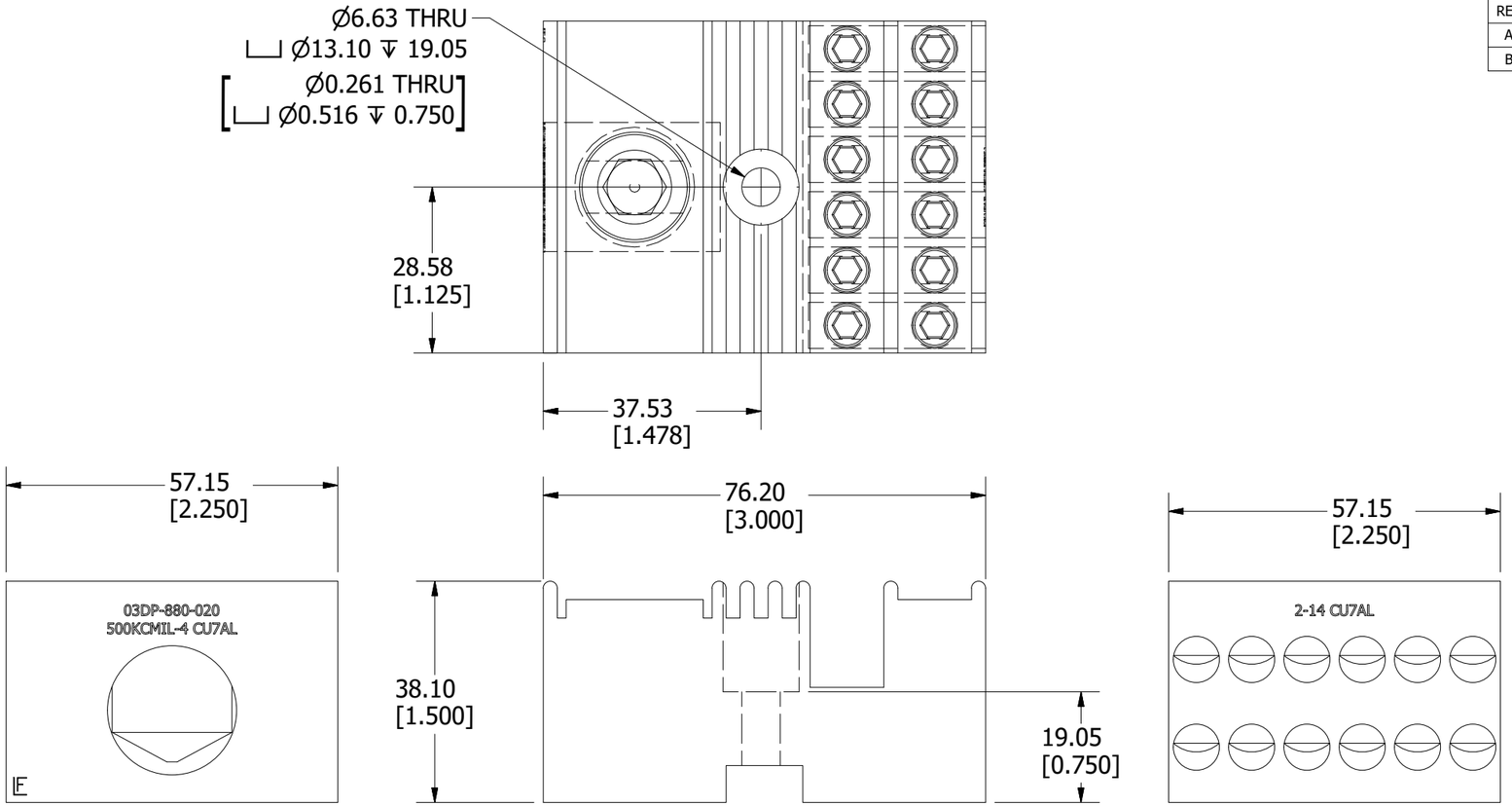

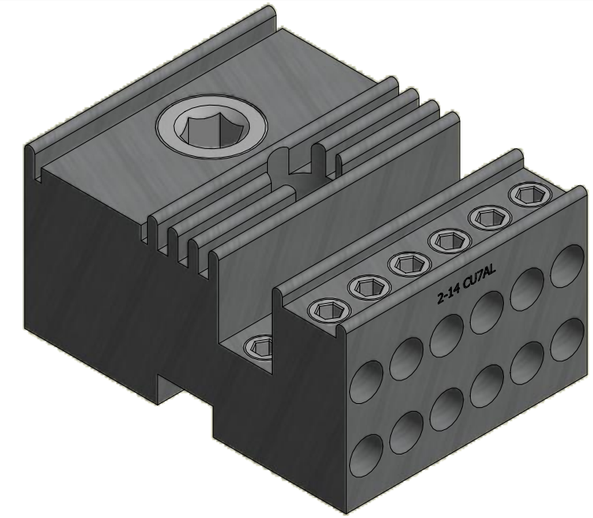

SPECIFICATIONS:

VOLTAGE RATING: 600V

AMPERE RATING: 380 AMP CU; 310 AMP AL

SUGGESTED TORQUE (LINE): 42.4 N-m (375 IN-LBS)

SUGGESTED TORQUE (LOAD): 5.6 N-m (50 IN-LBS) 2-6 AWG
4.5 N-m (40 IN-LBS) 8-14 AWG

WIRE RANGE (LINE): 500MCM-4 AWG Cu/Al
SOLID/STRANDED

WIRE RANGE (LOAD): 2-14 AWG Cu/Al
SOLID/STRANDED

FASTENER: M6 (1/4)

APPROVALS: cULus (FILE NO. E502265)

●	DENOTES CRITICAL CHARACTERISTICS.
CPK	DENOTES CPK DIMENSIONS, -MINIMUM CPK VALUE
⟨ST⟩	DENOTES A CHARACTERISTIC THAT PROVIDES AN INDICATION OF PROCESS PERFORMANCE. PROCEDURE FOR MEASUREMENT AND TRACKING TO BE DEFINED IN LITTELFUSE INSPECTION INSTRUCTIONS.
CP	DENOTES CP DIMENSIONS, -MINIMUM CP VALUE MUST BE WITHIN THE DIMENSIONAL LIMITATIONS SHOWN ON DRAWING AND INITIALLY LOCATED TO ALLOW FOR MAXIMUM TOOL LIFE.

B

MATL SPEC		FINISH	
DRW myork	DATE 8/17/2018	SCALE NTS	FINISH GOOD WT GRAMS/PIECE

UNLESS OTHERWISE SPECIFIED, DIMENSIONS ARE IN MILLIMETERS, DIMENSIONS IN BRACKETS [ ] ARE INCHES DIMENSIONING AND DO NOT INCLUDE PLATING. TOLERANCING TO BE INTERPRETED IN ACCORDANCE WITH ANSI Y14.5M-1994

3RD ANGLE PROJECTION

TITLE WCL008 OUTLINE

Littelfuse®
CHICAGO, ILLINOIS 60631

REVISION	DRWG NO.	SHEET 1 OF 1
B	OL-WCL008	

REVISION		
REV	DATE	DESCRIPTION
A	9/19/18	519868GCP - RELEASE PER EM3052 MRY
B	10/26/20	522955ECP/D - ADD MOUNTING HOLE DIMENSIONS MRY

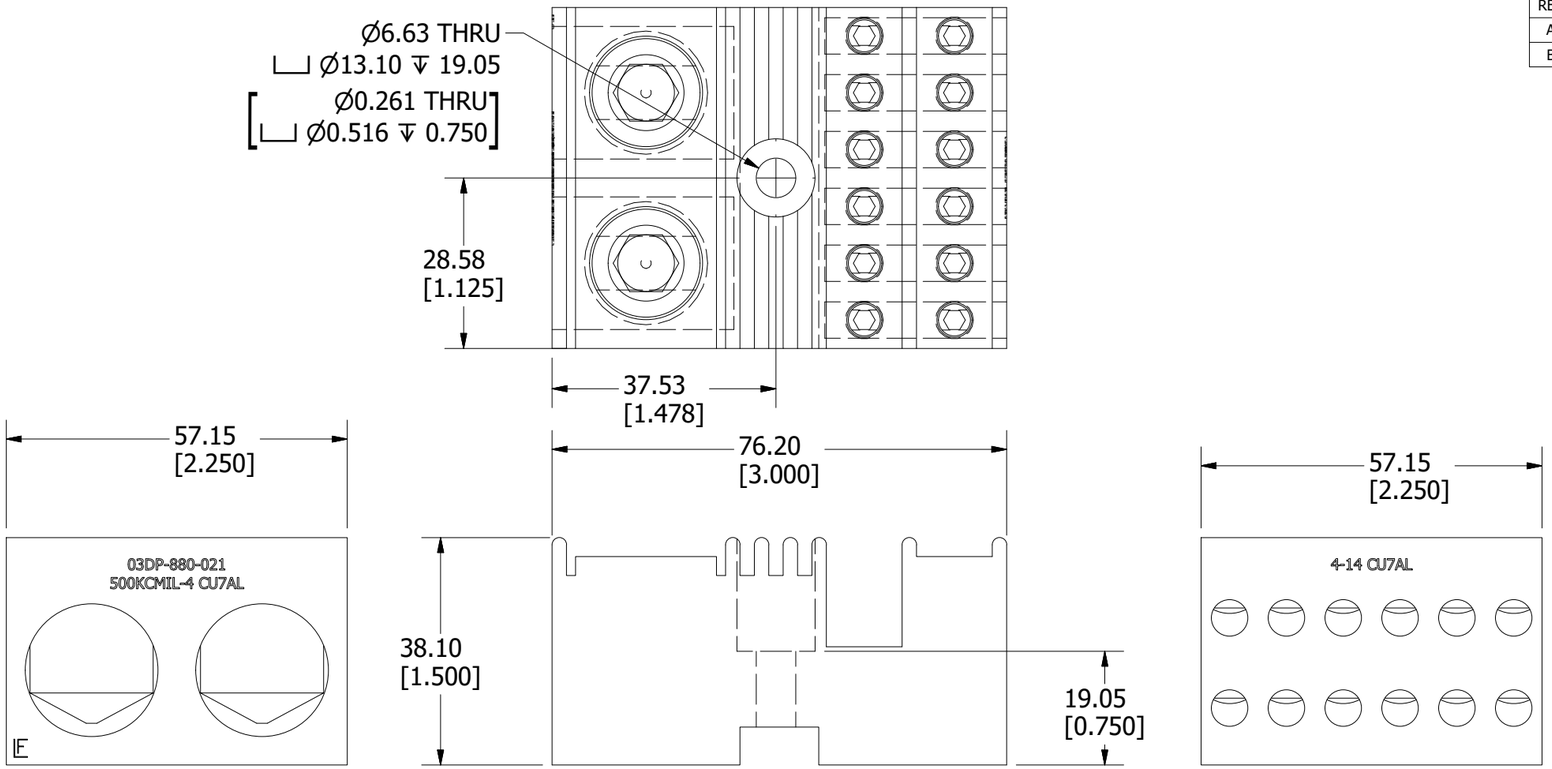

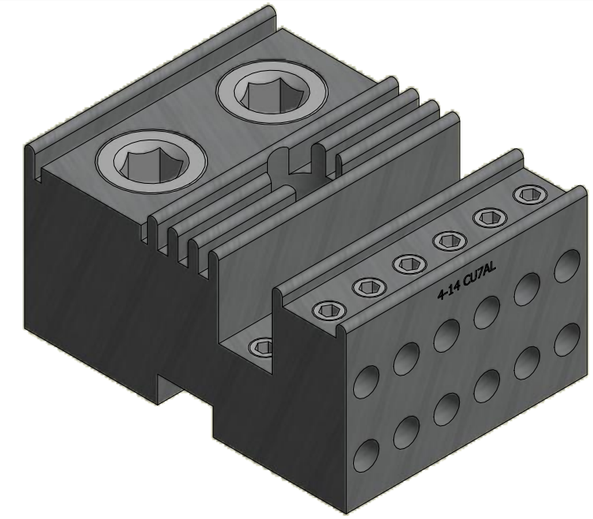

SPECIFICATIONS:

VOLTAGE RATING: 600V

AMPERE RATING: 760 AMP CU; 620 AMP AL

SUGGESTED TORQUE (LINE): 42.4 N-m (375 IN-LBS)

SUGGESTED TORQUE (LOAD): 4 N-m (35 IN-LBS) 4-14 AWG

WIRE RANGE (LINE): 500MCM-4 AWG Cu/Al
SOLID/STRANDED

WIRE RANGE (LOAD): 4-14 AWG Cu/Al
SOLID/STRANDED

FASTENER: M6 (1/4)

APPROVALS: cULus (FILE NO. E502265)

●	DENOTES CRITICAL CHARACTERISTICS.
CPK	DENOTES CPK DIMENSIONS, -MINIMUM CPK VALUE
⟨ST⟩	DENOTES A CHARACTERISTIC THAT PROVIDES AN INDICATION OF PROCESS PERFORMANCE. PROCEDURE FOR MEASUREMENT AND TRACKING TO BE DEFINED IN LITTELFUSE INSPECTION INSTRUCTIONS.
CP	DENOTES CP DIMENSIONS, -MINIMUM CP VALUE MUST BE WITHIN THE DIMENSIONAL LIMITATIONS SHOWN ON DRAWING AND INITIALLY LOCATED TO ALLOW FOR MAXIMUM TOOL LIFE.

B

MATL SPEC		FINISH	
DRW myork	DATE 8/17/2018	SCALE NTS	FINISH GOOD WT GRAMS/PIECE

UNLESS OTHERWISE SPECIFIED, DIMENSIONS ARE IN MILLIMETERS, DIMENSIONS IN BRACKETS [ ] ARE INCHES DIMENSIONING AND DO NOT INCLUDE PLATING. TOLERANCING TO BE INTERPRETED IN ACCORDANCE WITH ANSI Y14.5M-1994

3RD ANGLE PROJECTION

TITLE WCL009 OUTLINE

Littelfuse®
CHICAGO, ILLINOIS 60631

REVISION	DRWG NO.	SHEET 1 OF 1
B	OL-WCL009	

REVISION		
REV	DATE	DESCRIPTION
A	9/19/18	519868GCP - RELEASE PER EM3052 MRY
B	10/26/20	522955ECP/D - ADD MOUNTING HOLE DIMENSIONS MRY

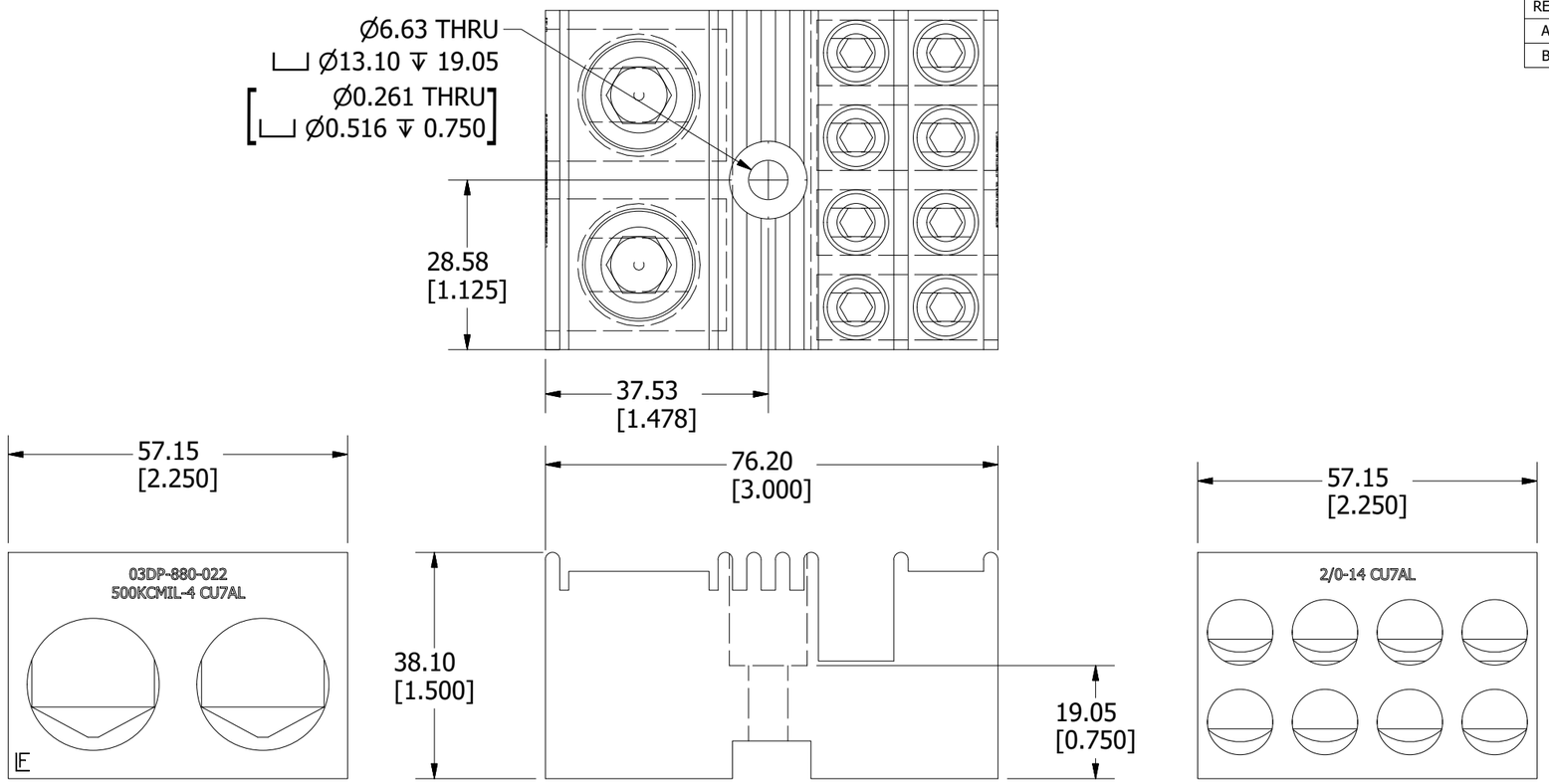

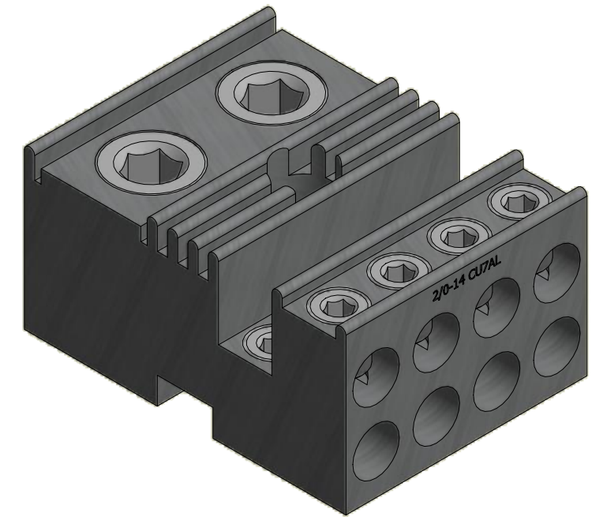

SPECIFICATIONS:

VOLTAGE RATING: 600V

AMPERE RATING: 760 AMP CU; 620 AMP AL

SUGGESTED TORQUE (LINE): 42.4 N-m (375 IN-LBS)

SUGGESTED TORQUE (LOAD): 13.6 N-m (120 IN-LBS) 2/0-6 AWG
4.5 N-m (40 IN-LBS) 8-14 AWG

WIRE RANGE (LINE): 500MCM-4 AWG Cu/Al
SOLID/STRANDED

WIRE RANGE (LOAD): 2/0-14 AWG Cu/Al
SOLID/STRANDED

FASTENER: M6 (1/4)

APPROVALS: cULus (FILE NO. E502265)

●	DENOTES CRITICAL CHARACTERISTICS.
CPK	DENOTES CPK DIMENSIONS, -MINIMUM CPK VALUE
⟨ST⟩	DENOTES A CHARACTERISTIC THAT PROVIDES AN INDICATION OF PROCESS PERFORMANCE. PROCEDURE FOR MEASUREMENT AND TRACKING TO BE DEFINED IN LITTELFUSE INSPECTION INSTRUCTIONS.
CP	DENOTES CP DIMENSIONS, -MINIMUM CP VALUE MUST BE WITHIN THE DIMENSIONAL LIMITATIONS SHOWN ON DRAWING AND INITIALLY LOCATED TO ALLOW FOR MAXIMUM TOOL LIFE.

B

MATL SPEC		FINISH	
DRW myork	DATE 8/17/2018	SCALE NTS	FINISH GOOD WT GRAMS/PIECE

UNLESS OTHERWISE SPECIFIED, DIMENSIONS ARE IN MILLIMETERS, DIMENSIONS IN BRACKETS [ ] ARE INCHES DIMENSIONING AND DO NOT INCLUDE PLATING. TOLERANCING TO BE INTERPRETED IN ACCORDANCE WITH ANSI Y14.5M-1994

3RD ANGLE PROJECTION

TITLE WCL010 OUTLINE

Littelfuse®
CHICAGO, ILLINOIS 60631

REVISION	DRWG NO.	SHEET 1 OF 1
B	OL-WCL010	

REVISION		
REV	DATE	DESCRIPTION
A	9/19/18	519868GCP - RELEASE PER EM3052 MRY
B	10/26/20	522955ECP/D - ADD MOUNTING HOLE DIMENSIONS MRY

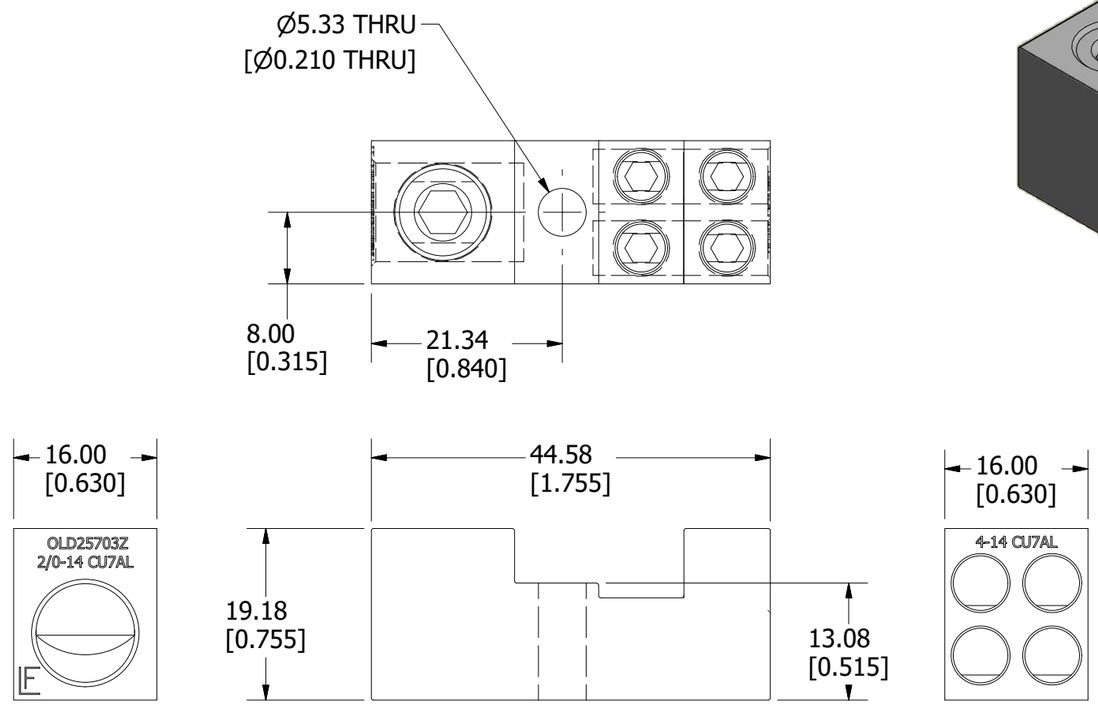

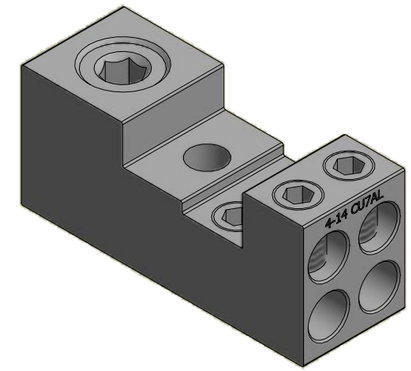

SPECIFICATIONS:

VOLTAGE RATING: 600V

AMPERE RATING: 175 AMP CU; 135 AMP AL

SUGGESTED TORQUE (LINE): 13.6 N-m (120 IN-LBS) 2/0-6 AWG
4.5 N-m (40 IN-LBS) 8-14 AWG

SUGGESTED TORQUE (LOAD): 4 N-m (35 IN-LBS) 4-14 AWG

WIRE RANGE (LINE): 2/0-14 AWG Cu/Al
SOLID/STRANDED

WIRE RANGE (LOAD): 4-14 AWG Cu/Al
SOLID/STRANDED

FASTENER: M5 (#10)

APPROVALS: cULus (FILE NO. E502265)

●	DENOTES CRITICAL CHARACTERISTICS.
CPK	DENOTES CPK DIMENSIONS, -MINIMUM CPK VALUE
ST	DENOTES A CHARACTERISTIC THAT PROVIDES AN INDICATION OF PROCESS PERFORMANCE. PROCEDURE FOR MEASUREMENT AND TRACKING TO BE DEFINED IN LITTELFUSE INSPECTION INSTRUCTIONS.
CP	DENOTES CP DIMENSIONS, -MINIMUM CP VALUE MUST BE WITHIN THE DIMENSIONAL LIMITATIONS SHOWN ON DRAWING AND INITIALLY LOCATED TO ALLOW FOR MAXIMUM TOOL LIFE.

B

MATL SPEC		FINISH	
DRW myork	DATE 8/17/2018	SCALE NTS	FINISH GOOD WT GRAMS/PIECE

UNLESS OTHERWISE SPECIFIED, DIMENSIONS ARE IN MILLIMETERS, DIMENSIONS IN BRACKETS [ ] ARE INCHES DIMENSIONING AND DO NOT INCLUDE PLATING. TOLERANCING TO BE INTERPRETED IN ACCORDANCE WITH ANSI Y14.5M-1994

3RD ANGLE PROJECTION

TITLE WCL011 OUTLINE

Littelfuse®
CHICAGO, ILLINOIS 60631

REVISION	DRWG NO.	SHEET 1 OF 1
B	OL-WCL011	

REVISION		
REV	DATE	DESCRIPTION
A	9/19/18	519868GCP - RELEASE PER EM3052 MRY
B	10/26/20	522955ECP/D - ADD MOUNTING HOLE DIMENSIONS MRY

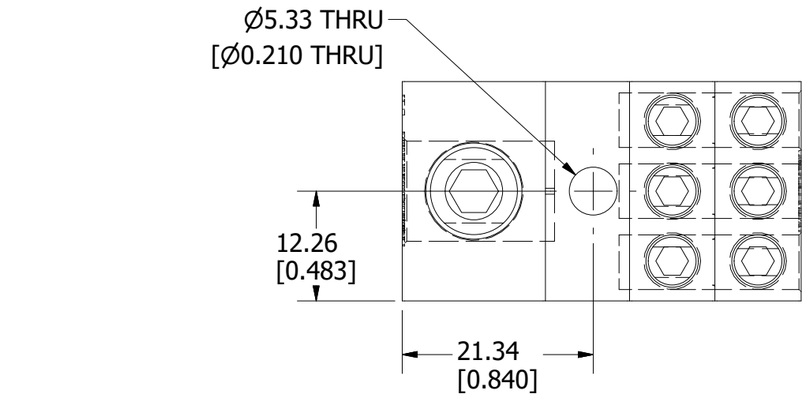

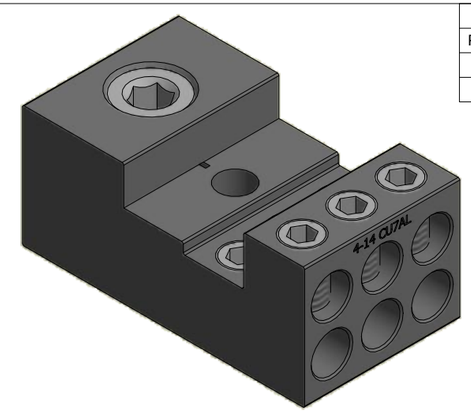

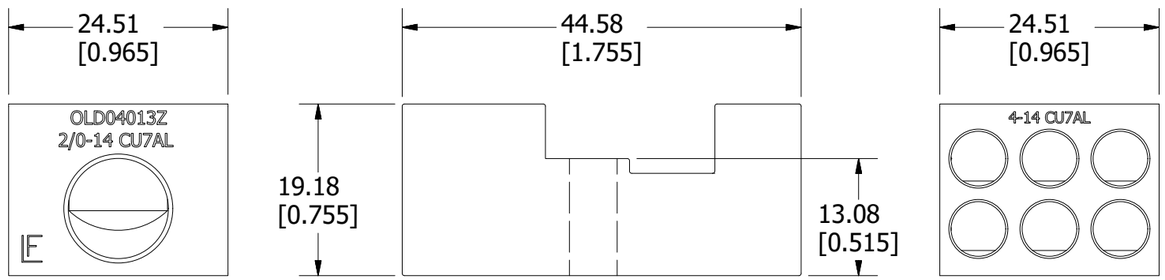

SPECIFICATIONS:

VOLTAGE RATING: 600V

AMPERE RATING: 175 AMP CU; 135 AMP AL

SUGGESTED TORQUE (LINE): 13.6 N-m (120 IN-LBS) 2/0-6 AWG
4.5 N-m (40 IN-LBS) 8-14 AWG

SUGGESTED TORQUE (LOAD): 4 N-m (35 IN-LBS) 4-14 AWG

WIRE RANGE (LINE): 2/0-14 AWG Cu/Al
SOLID/STRANDED

WIRE RANGE (LOAD): 4-14 AWG Cu/Al
SOLID/STRANDED

FASTENER: M5 (#10)

APPROVALS: cULus (FILE NO. E502265)

●	DENOTES CRITICAL CHARACTERISTICS.
CPK	DENOTES CPK DIMENSIONS, -MINIMUM CPK VALUE
⟨ST⟩	DENOTES A CHARACTERISTIC THAT PROVIDES AN INDICATION OF PROCESS PERFORMANCE. PROCEDURE FOR MEASUREMENT AND TRACKING TO BE DEFINED IN LITTELFUSE INSPECTION INSTRUCTIONS.
CP	DENOTES CP DIMENSIONS, -MINIMUM CP VALUE MUST BE WITHIN THE DIMENSIONAL LIMITATIONS SHOWN ON DRAWING AND INITIALLY LOCATED TO ALLOW FOR MAXIMUM TOOL LIFE.

B

MATL SPEC		FINISH	
DRW myork	DATE 8/17/2018	SCALE NTS	FINISH GOOD WT GRAMS/PIECE

UNLESS OTHERWISE SPECIFIED, DIMENSIONS ARE IN MILLIMETERS, DIMENSIONS IN BRACKETS [ ] ARE INCHES DIMENSIONING AND DO NOT INCLUDE PLATING. TOLERANCING TO BE INTERPRETED IN ACCORDANCE WITH ANSI Y14.5M-1994

3RD ANGLE PROJECTION

TITLE WCL012 OUTLINE

Littelfuse®
CHICAGO, ILLINOIS 60631

REVISION	DRWG NO.	SHEET 1 OF 1
B	OL-WCL012	