P.N	VOLTAGE	HARDWARE
24450	12VDC	ASSEMBLED
Ⓒ		
Ⓒ		
24450-02	24VDC	ASSEMBLED
Ⓒ		
Ⓒ		

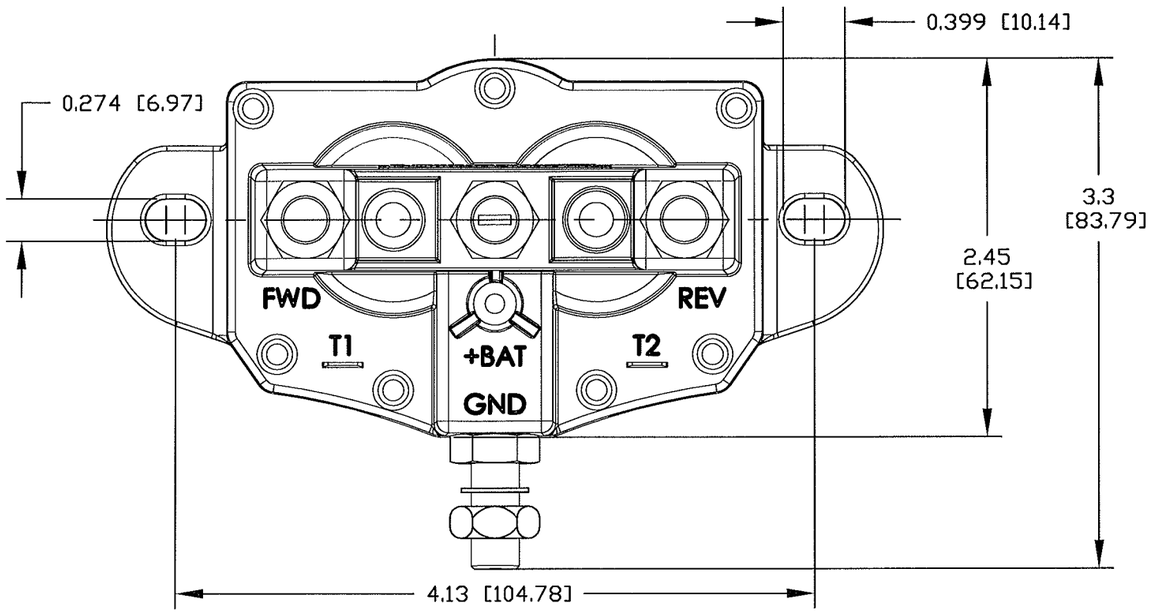

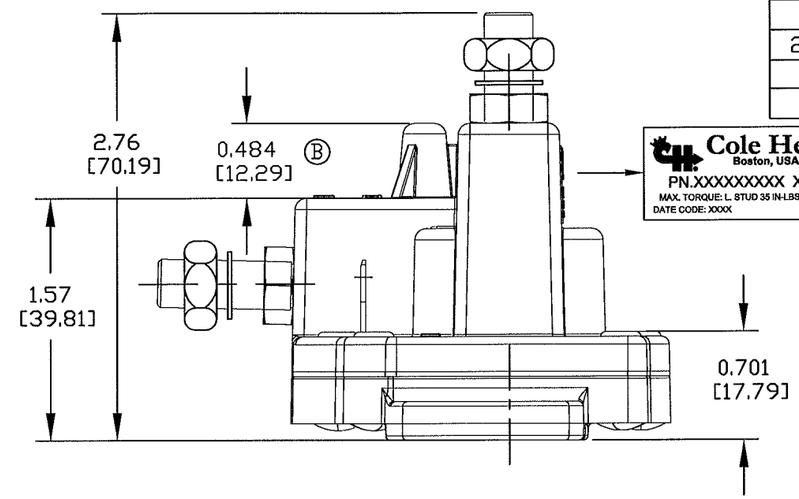

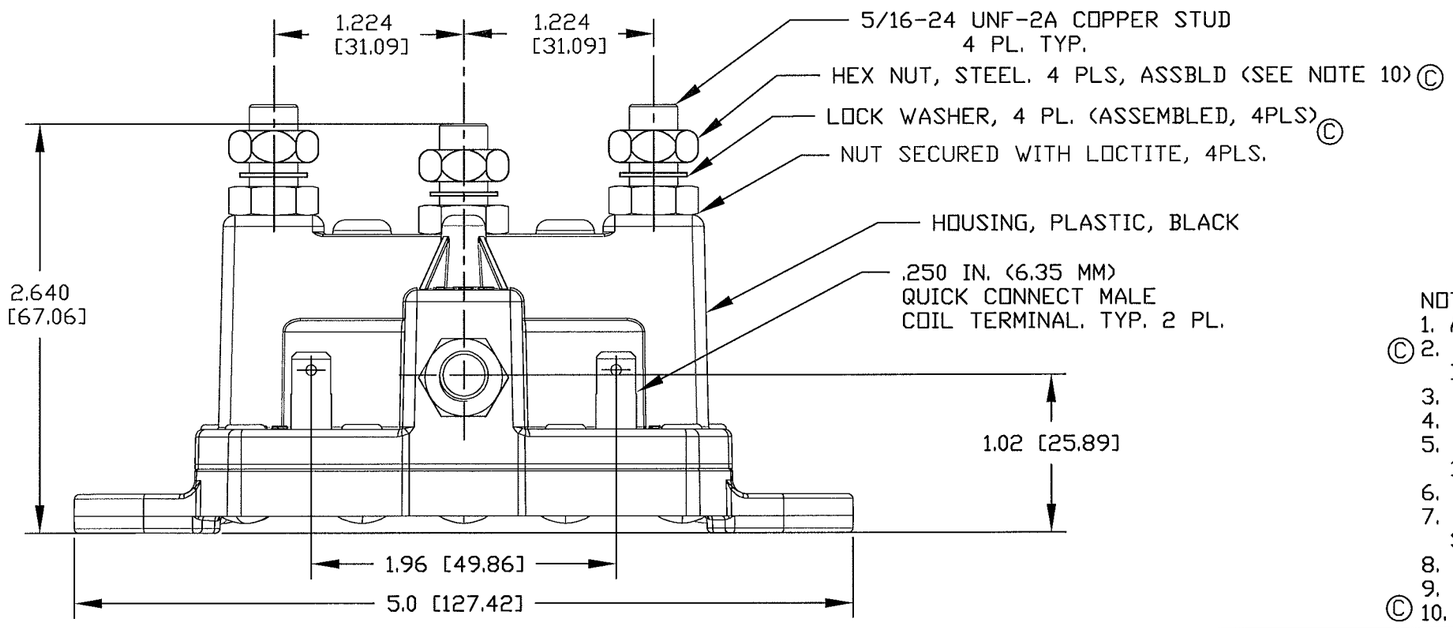

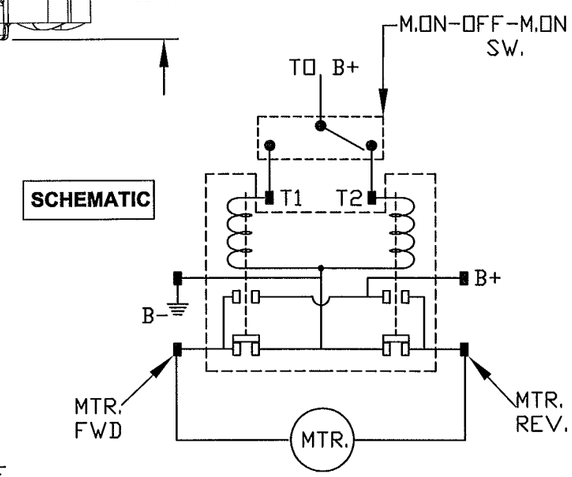

NOTES:
1. ALL DIMENSIONS ARE REFERENCE.
Ⓒ 2. SOLENOID IS RESISTANT TO DUST, WATER SPLASH, OIL, ANTI-FREEZE AND BRAKE FLUID EQUIV. TO IP6X.
3. HOUSING MATERIAL: NYLON, GLASS REINFORCED.
4. ELECTRICAL RATING: MAKE & BREAK 75AMPS.
5. MAX.DUTY CYCLE: 5 MIN. ON - 5 MIN. OFF @75AMPS/12V, 25°C. 125A/12V FOR 30 SECS. MAX ON TIME; 150A/12V FOR .5 SECS. MAX. ON TIME.
6. CONTACT LIFE CYCLE RATING: 10,000 CYCLES @ 75AMPS, INDUCTIVE.
7. SOLENOID IS DESIGNED TO BE ACTIVATED ONLY WITH A MOMENTARY SWITCH SIMILAR TO CH P.N 55033-01.
8. FOR VOLTAGE AND HARDWARE SELECTION: SEE CHART.
9. SOLENOID DYNAMIC-PARKS MOTOR WITH ACTUATION SW. IN THE OFF POSITION.
Ⓒ 10. 5/16 HEXNUT TORQUE FOR CABLE INSTALLATION : 35 IN-LBS (3.95.Nm)

Revision Control Record

Rev.	Description of Change	ECN No.	Date
A	NEW PART	03443	10/10/03
B	GEO & DIM CHANGES	12189	5/16/12
C	HARWARE ASSBLD; PN's REMOVED	13184	06/25/13

Rev.	Description of Change	ECN No.	Date

Note: unless noted otherwise all dimension are AFTER plating
Tolerances: Unless otherwise specifically noted, the following are default tolerances;

2-places	3-places	Angular
± 0.02 [0.5]	± 0.005 [0.13]	± 1°

Unless otherwise specified dimensions are in inches. Dimensions in brackets [ ] are in millimeters.
"REF" = Non-Toleranced Reference Dimension, shown for clarification purposes only.
Note: *All tolerances are Non-Cumulative.*

PROPRIETARY INFORMATION
All information contained herein, is proprietary to the Cole Hersee Company. Unauthorized use or reproduction is prohibited.

3RD ANGLE PROJECTION

Special Characteristics:
CC Critical Characteristic, relating to Safety and/or Regulatory Compliance
X Significant Characteristic relating to Process Control
KC Control Dimension relating to Form - Fit - Function as defined by Cole Hersee Company and/or the Customer

Littelfuse®
Phn: 617-268-2100 Web: www.colehersee.com

Description: SOLENOID FWD - REV.

Drawing / Part No.: 24450-CHART
Current Rev. C

FORM CHT-6 (1/12) | Used On or Ref.: EX27922-A | Scale: 1:1 | Drawn BY: G.Auguste | Date Drawn: 05/13/03 | Pg. 1 of 1