CURREN RATE [A]	VERSIONS AND PART NUMBERS	THICKNESS "S" (mm)
30	156.5677.5301	0.4
40	156.5677.5401	0.4
50	156.5677.5501	0.4
60	156.5677.5601	0.4
80	156.5677.5801	0.8
110	156.5677.6111	0.8
150	156.5677.6151	0.8
175	156.5677.6171	0.8

LTR	DATE	REVISION	DRW
A	01/FEB/23	526176GCA - INITIAL RELEASE	OPL

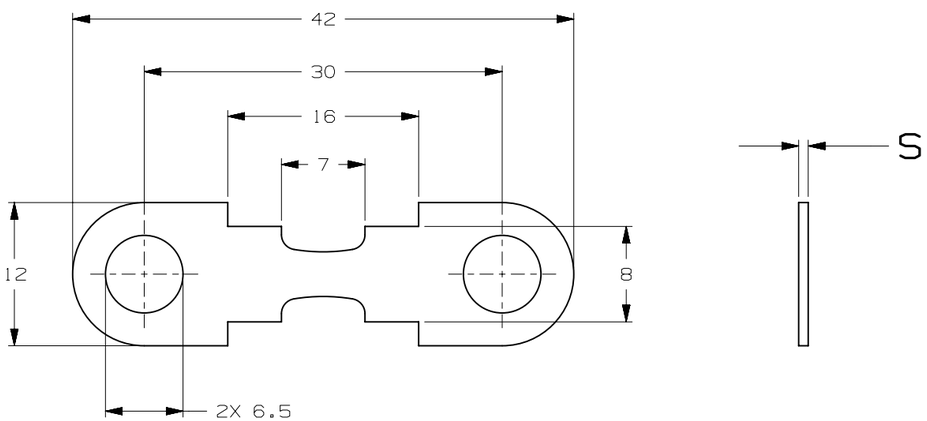

ISOMETRIC VIEW

HSB 32V	
TERMINAL MATERIAL:	ZINC ALLOY
TERMINAL PLATING:	NONE
HOUSING MATERIAL:	NONE

LINEAR DIMENSIONS					ANGLES	RADII
DIM	.5 - 6	6 - 30	30 - 120	120 - 400	±0.5°	±0.2
TOL	±0.1	±0.2	±0.3	±0.5		

3RD ANGLE PROJECTION

Littelfuse®
CHICAGO, USA 773-628-1000

REVISION A

DRWG. NO. WEB-156.5677.0000