Revision Control Record

Rev.	Description of Change	ECN No.	Date
K	DIMENSION	02335	7/12/02
L	DIMENSION, ADD PANTONE	12356	12/17/12
M	-09 BOOT;LIGHTGRAY ADDED	13105	06/17/13

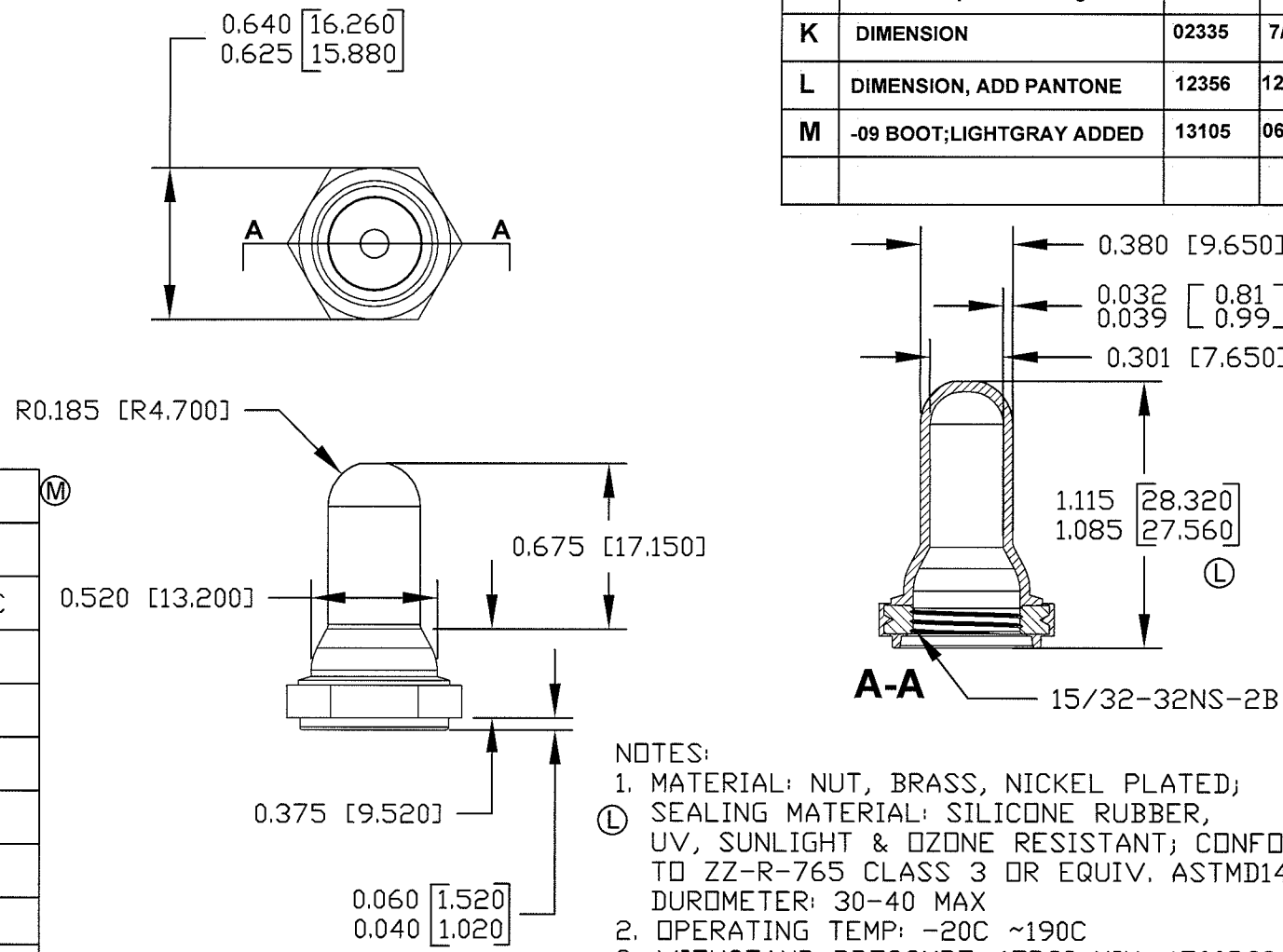

PART NO.	COLOR	PANTONE
81264-09	LIGHT GRAY	429C M
81264-08	ORANGE	1495C
81264-07	YELLOW	YELLOW C
81264-06	BROWN	478C
81264-05	RED	185C 2X
81264-04	GREEN	356C
81264-03	CLEAR	651C
81264-02	BLUE	662C
81264-01	BLACK	BLACK
81264 M	DARK GRAY	PMS 445/446

NOTES:
1. MATERIAL: NUT, BRASS, NICKEL PLATED;
L SEALING MATERIAL: SILICONE RUBBER, UV, SUNLIGHT & OZONE RESISTANT; CONFORMS TO ZZ-R-765 CLASS 3 OR EQUIV. ASTMD1418; DUROMETER: 30-40 MAX
2. OPERATING TEMP: -20C ~190C
3. WITHSTAND PRESSURE: 15PSI MIN, 1500PSI MAX
4. BOOT MUST REMAIN SOFT AND NOT BE RIGID
L WITHIN TEMP RANGE LISTED ABOVE.

Tolerances Unless otherwise specifically noted, the following are default tolerances;
* 2-place Decimal Dimensions +/- .02"
* 3-place Decimal Dimensions +/- .005"
* Angular Dimensions +/- 1.0 Deg.
* Metric: Refer to equivalent English Dimension Tolerance
>>> NOTE: *All tolerances are Non-Cumulative.* <<<

Dimensional Units All dimensions are expressed in inches except those shown in brackets (xxx) are expressed in millimeters

"REF." or an Asterisk (*) = Non-Toleranced Reference Dimension, shown for clarification purposes only.

PROPRIETARY INFORMATION This Engineering Drawing, and the information contained herein, is proprietary to Cole Hersee Company and may not be disclosed, re-produced, or in any other way transferred or communicated to any other party without the express written consent of an authorized representative of Cole Hersee Company.

DESIGN CONTROL It is the responsibility of the individual using / referencing this drawing to assure that the noted design revision level agrees with the revision level of the Controlled Document (Master Drawing). This is a NON-CONTROLLED DOCUMENT unless otherwise specifically noted.

DO NOT SCALE - Dimensional variation may occur during printing / reproduction.

Key for Special Characteristics:

CC Critical Characteristic, relating to Safety and/or Regulatory Compliance

X Significant Characteristic relating to Process Control (SPC)

CD Control Dimension relating to Form - Fit - Function as defined by Cole Hersee Company and/or the Customer

(Note that the identification of any Characteristics as being "Special" does not alter the requirement that ALL specificed dimensions & tolerances must be met.)

Cole Hersee Co.
20 Old Colony Ave., South Boston, MA, 02127
Phn: 617-268-2100 Web: www.colehersee.com

Description: BOOT

Used On or Ref.:	Scale:	Drawn By:	Date Drawn:	Responsible Engineer:	Drawing / Part No.:	Current Rev.
EX16782B	1:1	A.VISCO	12/12/12	G.Auguste	81264-CHART	M