REVISION		
REV	DATE	DESCRIPTION
A	9/2/22	525636GCP - RELEASE MRY
B	11/3/22	525897ECP/D - ADD DEPTH DIMENSION MRY

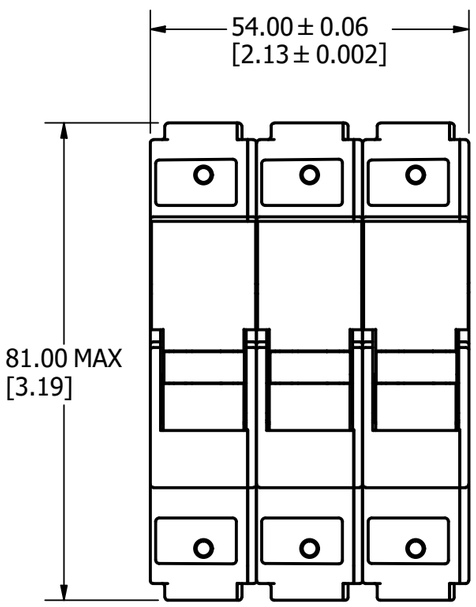

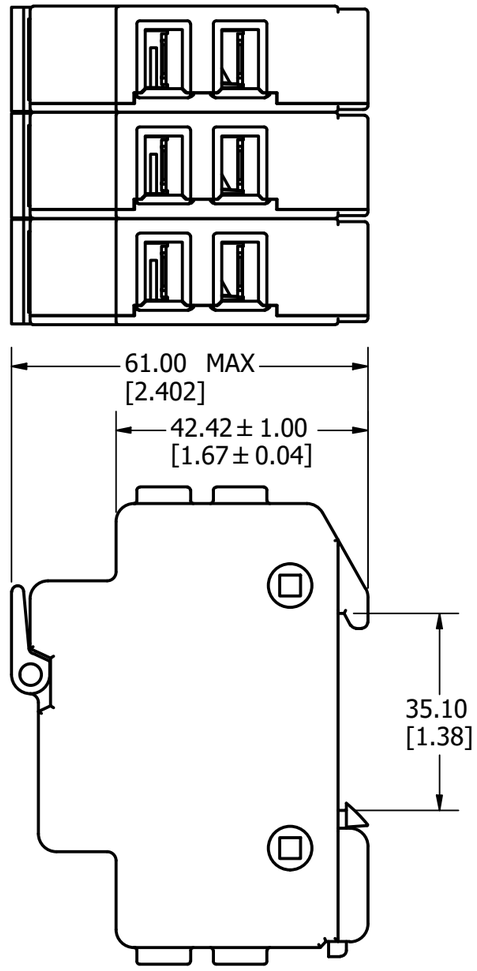

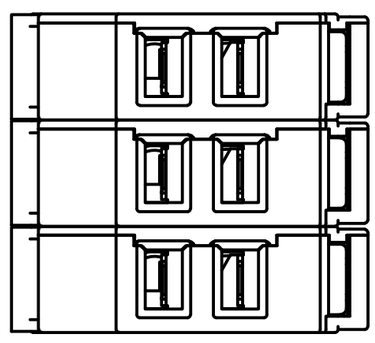

SPECIFICATIONS:

VOLTAGE RATING: 600VAC/DC

AMPERE RATING: 30 AMPERES

INTERRUPT RATING: 100kA

TERMINAL TYPE: 1/4" QUICK CONNECT

APPROVALS: UL RECOGNIZED (E14721)
CSA CERTIFIED (LR7316)
CCC APPROVED (2010010308391538)

1				
NO	COMPONENT NO	DESCRIPTION	QTY/M	U/M

BILL OF MATERIAL

<S>	CRITICAL CHARACTERISTIC FOR PART SAFETY/COMPLIANCE
●	DENOTES CRITICAL CHARACTERISTICS.
CPK	DENOTES CPK DIMENSIONS, -MINIMUM CPK VALUE
⟨ST⟩	DENOTES A CHARACTERISTIC THAT PROVIDES AN INDICATION OF PROCESS PERFORMANCE. PROCEDURE FOR MEASUREMENT AND TRACKING TO BE DEFINED IN LITTELFUSE INSPECTION INSTRUCTIONS.
CP	DENOTES CP DIMENSIONS, -MINIMUM CP VALUE MUST BE WITHIN THE DIMENSIONAL LIMITATIONS SHOWN ON DRAWING AND INITIALLY LOCATED TO ALLOW FOR MAXIMUM TOOL LIFE.

B

MATL SPEC		FINISH	
DRW JMOLER	DATE 8/26/2022	SCALE NTS	FINISH GOOD WT GRAMS/PIECE

UNLESS OTHERWISE SPECIFIED, DIMENSIONS ARE IN MILLIMETERS, DIMENSIONS IN BRACKETS [ ] ARE INCHES DIMENSIONING AND DO NOT INCLUDE PLATING. TOLERANCING TO BE INTERPRETED IN ACCORDANCE WITH ANSI Y14.5M-1994

3RD ANGLE PROJECTION

TITLE LPSM003QCID OUTLINE

Littelfuse®
CHICAGO, ILLINOIS 60631

REVISION B

DRWG NO. OL-LPSM003QCID

SHEET 1 OF 1