Revision Control Record			
Rev.	Description of Change	ECN No.	Date
K	CORRECT NOTE	07463	12/03/07
L	CHANGE BOM	09587	01/13/10
M	FIXED TYPO	12174	4/20/12

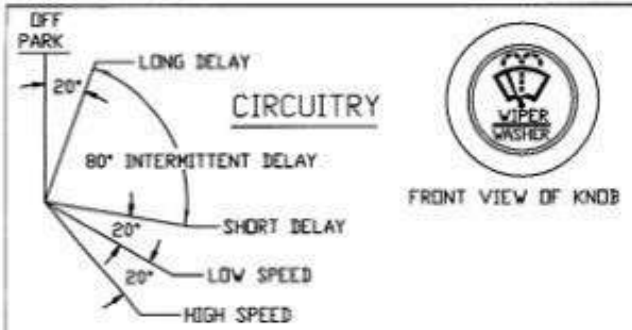

FRONT VIEW OF KNOB

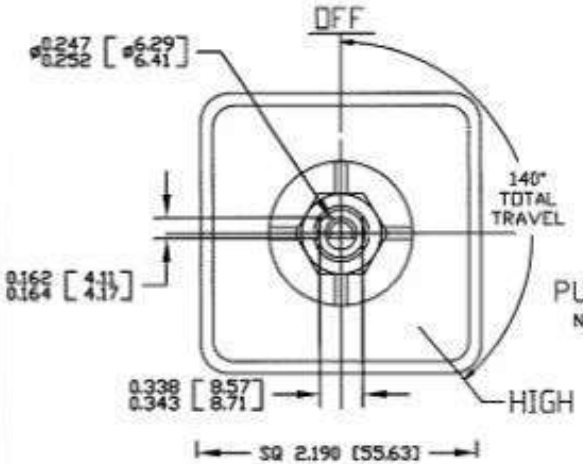

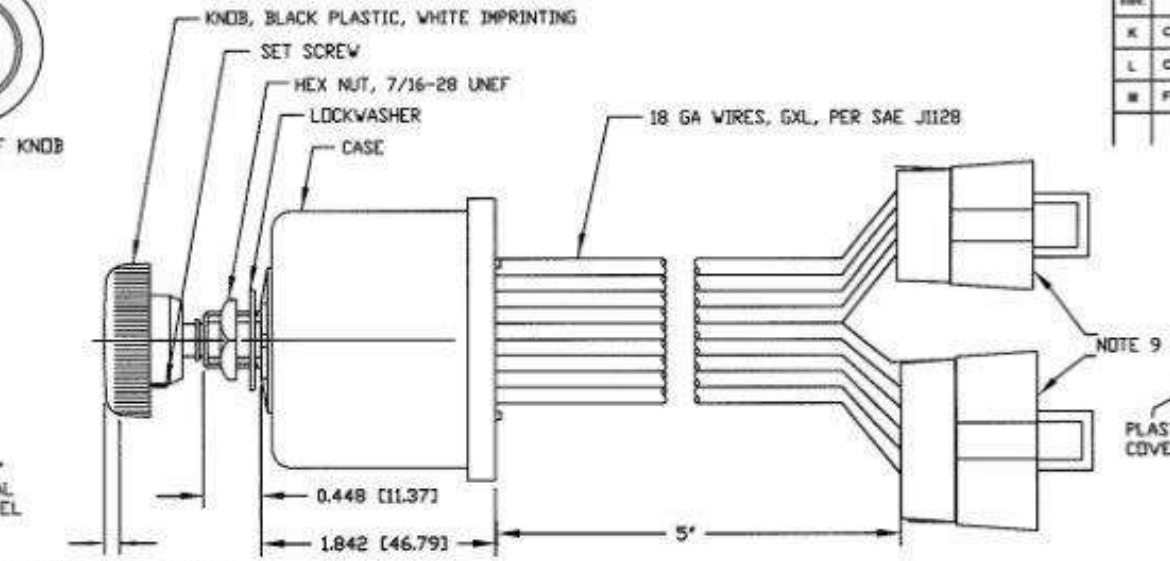

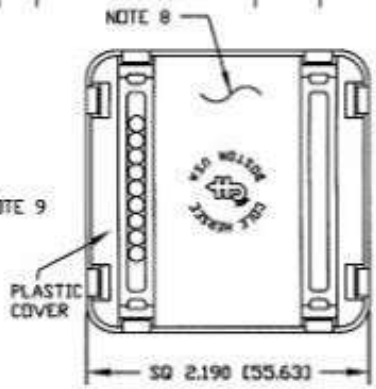

NOTES:
1. DESIGNED FOR 24V SYSTEM, DUAL MOTOR, DYNAMIC AND NON-DYNAMIC PARK.
2. PUSH TO WASH FUNCTION RESULTS IN 3 WIPES AFTER RELEASE OF PUSH SWITCH.
3. RATING: VOLTAGE OPERATING RANGE 18VDC TO 32VDC
   ROTARY SWITCH ACTUATION 20,000 CYCLES MINIMUM.
   MOTOR DRIVE: 10 AMPS PER MOTOR CONTINUOUS. START-UP/STALL/LOCKED-ROTOR 30 AMPS. SHORT-CIRCUIT PROOF.
   WASHER CIRCUIT 3 AMPS, PUSH SWITCH 20,000 CYCLES MINIMUM.
4. MICROPROCESSOR CONTROLLED, SOLID-STATE RELAY, CURRENT LIMIT SENSE CIRCUIT, REVERSE POLARITY PROTECTED
5. CONFORMS TO SAE J1455:
   4.11 GENERAL HEAVY DUTY TRUCK ELECTRICAL ENVIRONMENT.
      4.11.1 STEADY-STATE ELECTRICAL CHARACTERISTICS.
      4.11.2 TRANSIENT, NOISE AND ELECTROSTATIC CHARACTERISTICS.
6. INTERMITTENT DELAYS: 1, 2, 4, 7, 11 AND 16 SECONDS
7. ALL DIMENSIONS ARE REFERENCE ONLY UNLESS NOTED OTHERWISE.
8. COLE HERSEE PART NUMBER, REVISION, & DATE CODE STAMPED IN WHITE ON REAR PLASTIC COVER.
9. CONNECTORS, DELPHI: 6-PIN, PART# 2977042 (QTY 1); 4-PIN, PART# 6294544 (QTY 1)
   TERMINALS, DELPHI: PART#2965439 (QTY 9)

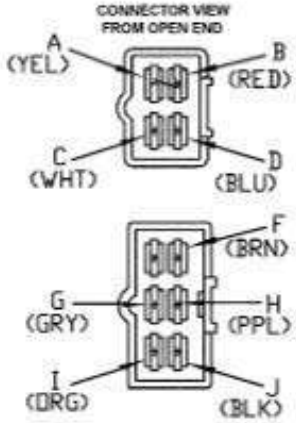

COLOR	FUNCTION	TERMINAL
YELLOW	LOW-SPEED MOTOR #1	A
RED	VBB (24V POWER)	B
WHITE	HIGH-SPEED MOTOR#1	C
BLUE	PARK MOTOR #1	D
BROWN	WASHER	F
GREY	HIGH-SPEED MOTOR #2	G
PURPLE	PARK MOTOR #2	H
ORANGE	LOW-SPEED MOTOR #2	I
BLACK	GROUND (0V)	J

Tolerances: Unless otherwise specifically noted, the following are default tolerances:
* Surface Decimal Dimensions +/- .02"
* Surface Decimal Dimensions +/- .005"
* Angular Dimensions +/- 1.0 Deg.
* Metric: Refer to equivalent English Dimension Tolerances
*** NOTE: All tolerances are Non-Cumulative. ***

Dimensional Units: All dimensions are expressed in inches except those shown in brackets [mm] are expressed in millimeters.

NRC or as labeled (*), = Non-Tolerenced Reference Dimension, shown for clarification purposes only.

PROPRIETARY INFORMATION: This Engineering Drawing, and the information contained herein, is proprietary to Cole Hersee Company and may not be disclosed, reproduced, or in any other way transferred or communicated to any other party without the express written consent of an authorized representative of Cole Hersee Company.

REVISIONS: It is the responsibility of the individual using/referencing this drawing to ensure that the noted design revision level agrees with the revision level of the Controlled Document (Master Drawing). This is a NON-CONTROLLED DOCUMENT unless otherwise specifically noted.

DO NOT SCALE - Dimensional relation may occur during printing/reproduction.

Special Characteristics:
Critical Characteristic, relating to Safety and/or Regulatory Compliance
Significant Characteristic, relating to Process Control (SPC)
Critical Dimension relating to Form - Fit - Function as defined by Cole Hersee Company (NOT the Customer)
[Note that the identification of any Characteristics as being "Special" does not alter the requirement that ALL specified dimensions & tolerances must be met.]

Used On or Ref.:	EX28333	Scale: 1:1	Drawn By: JCS	Date Drawn: 10/10/06	Responsible Engineer: JCS	Pg. 1

Cole Hersee Co.
20 Old Colony Ave., South Boston, MA, 02127
Phn: 617-268-2100 Web: www.colehersee.com

Description: WINDSHIELD WIPER CONTROLLER, DUAL-MOTOR, 24V, SSR

Drawing/Part No.: 75602-02

Current Rev.: M