LTR	DATE	REVISION	CHK	APD
A	04/16/09	000667ER - RELEASED	CAD	
B	08/11/10	SA393-ADDED STYLE "B" TORQUE SPEC AND DIMENSION INFO IN CHART FOR 1/2"-13 PASS THRU CAD		

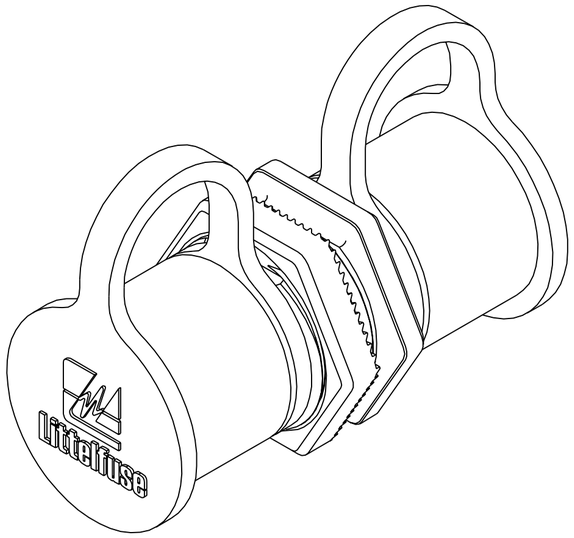

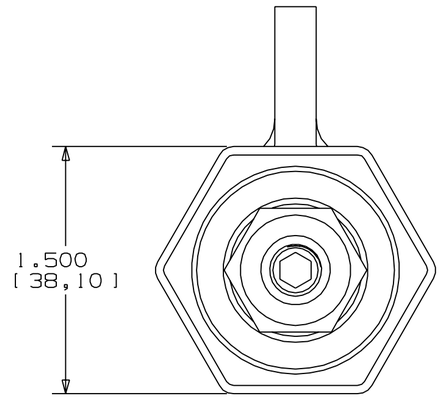

SECTION A - A

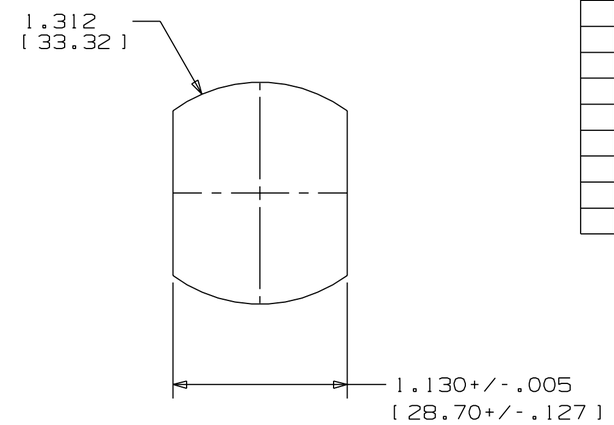

TYPICAL PANEL CUTOUT
"NOT TO SCALE"

PART NUMBER	SIZE	COLOR	DIM "A"	DIM "B"	"C"
JBPT0001Z	.375	RED	1.500/38.101	.75/19.05	3/8"-16
JBPT0002Z	.375	BLACK	1.500/38.101	.75/19.05	3/8"-16
JBPT0003Z	.500	RED	1.700/43.18	.65/16.51	1/2"-13
JBPT0004Z	.500	BLACK	1.700/43.18	.65/16.51	1/2"-13

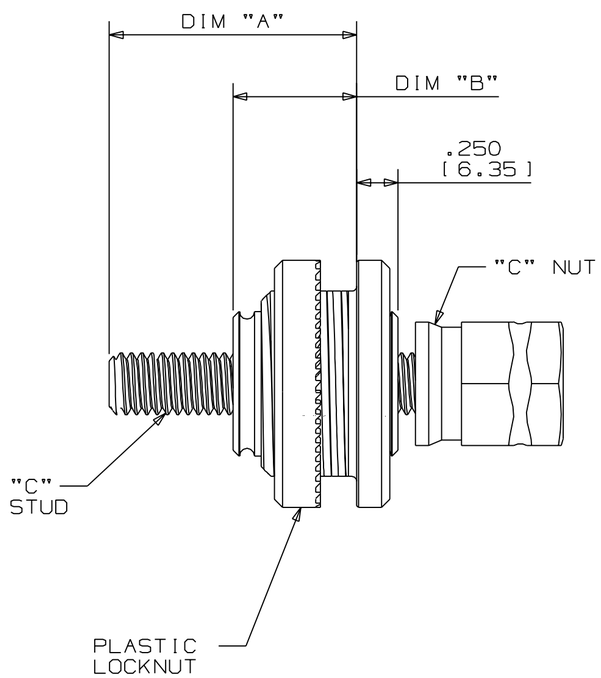

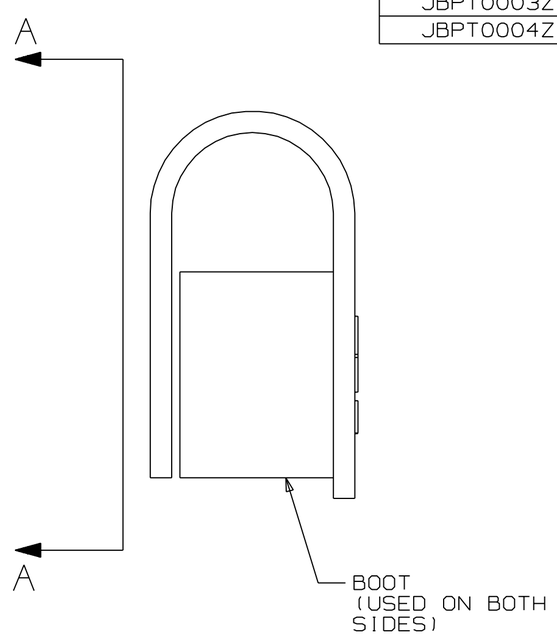

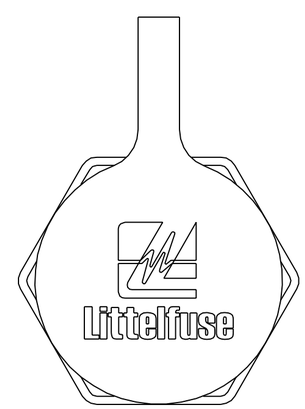

NOTES:
1. ALL DIMENSIONS ARE FOR REFERENCE ONLY.
2. MOUNTING THREADS ARE 1"-11 1/2 NPSM
3. MAXIMUM MOUNTING TORQUE-10 FT. LBS.
4. MAXIMUM TORQUE ON 3/8-16 STUDS-40 FT.LBS.
   MAXIMUM TORQUE ON 1/2-13 STUDS-40 FT.LBS.
   PART TO BE RESTRAINED DURING TORQUE PROCEDURE
5. PARTS SUPPLIED AS SHOWN.

NO	COMPONENT NO	DESCRIPTION	QTY/M	U/M
-				
-				
-				

BILL OF MATERIAL

UNLESS OTHERWISE SPECIFIED, DIMENSIONS ARE IN MILLIMETERS. DIMENSIONS IN BRACKETS [ ] ARE INCHES

UNLESS OTHERWISE SPECIFIED, DIMENSIONS DO NOT INCLUDE PLATING.

◎ DENOTES CRITICAL CHARACTERISTICS.

CPK DENOTES CPK DIMENSIONS, -MINIMUM CPK VALUE

ST DENOTES A CHARACTERISTIC THAT PROVIDES AN INDICATION OF PROCESS PERFORMANCE. PROCEDURE FOR MEASUREMENT AND TRACKING TO BE DEFINED IN LITTELFUSE INSPECTION INSTRUCTIONS

CP DENOTES CP DIMENSIONS, -MINIMUM CP VALUE MUST BE WITHIN THE DIMENSIONAL LIMITATIONS SHOWN ON DRAWING AND INITIALLY LOCATED TO ALLOW FOR MAXIMUM TOOL LIFE — C

COPIES TO: 1 9 18 / 2 10 19 / 3 12 20 / 4 13 21 / 5 14 23 / 6 15 33 / 7 16 43 / 8 17 53

MATL SPEC -

FINISH -

DRW CAD	DATE 03/23/09	SCALE 1.5:1
CHK	DATE	SUPER DR
APPD	DATE	FINSH GOOD WT GRAMS/PIECE

TOLERANCES UNLESS OTHERWISE SPECIFIED (REF. ISO 2768-fH)

DIMENSION	0.5 - 3 (UP TO)	3 - 6 (OVER / UP TO)	6 - 30 (OVER / UP TO)	30 - 120 (OVER / UP TO)	120 - 400 (OVER / UP TO)
TOLERANCE	-	-	-	-	-

3RD ANGLE PROJECTION

TITLE PASS-THRU (STYLE A) 3/8"-16
(STYLE B) 1/2"-13

Littelfuse DES PLAINES, ILLINOIS 60016

REVISION A

DRWG. NO. SERIES OUTLINE OL - JBPT0000Z

CAD GENERATED DRAWING - NO PENCIL CHANGES ALLOWED