| PART NUMBER | WITH BOX |
|---|---|
| OFHZ0002Z | NONE |
| OFHZ0002Z-BX | CA-606 |

| LTR | DATE | REVISION | CHK | APD |
|---|---|---|---|---|
| A | 26/Jun/18 | 519497GCC-NEW RELEASE FYUE | | |

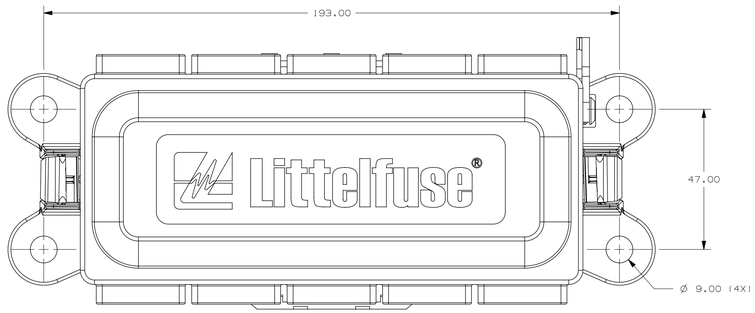


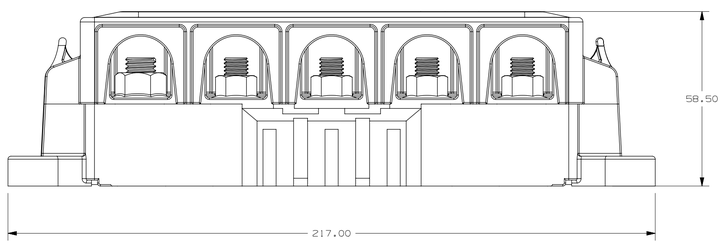


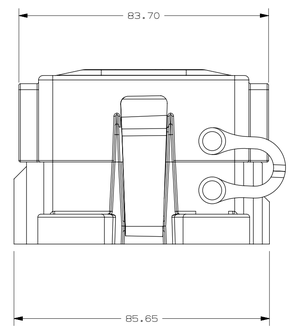


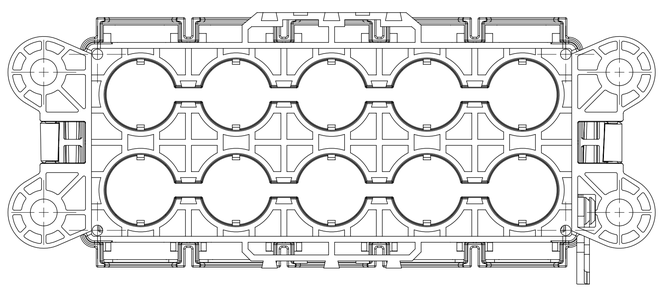

NOTES:

1. MATERIALS:
   BASE/COVER: BLACK FR530
   BUS BAR: C1100 Sn PLATED
   TETHER: BLACK SILICON RUBBER
   DUST COVER: GREEN SILICON RUBBER
   STUD: STEEL Zn/Fe ALLOY PLATED
   BOTTOM CAP: BLUE PA66
   LATCH: YELLOW POM
   FLANGE NUT: STAINLESS STEEL
2. MAX. MAIN INPUT: 400A
3. OPERATING TEMPERATURE RANGE: -40°C TO 85°C
4. M8 MOUNTING TORQUE: 10±2 Nm
5. MAX. WIRE SIZE 105 sqmm OR AWG 4/0.

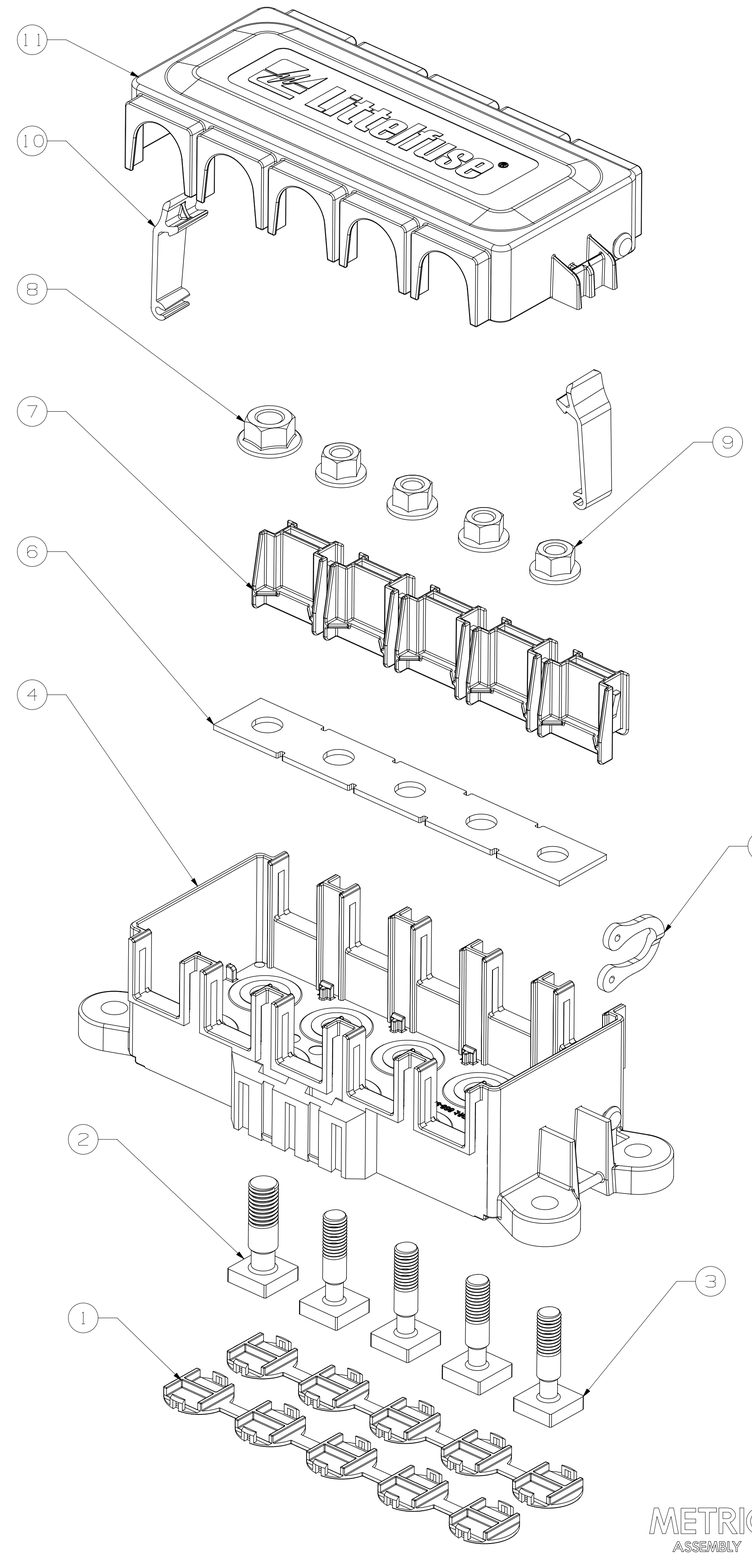


| NO | COMPONENT NO | DESCRIPTION | QTY/M | U/M |
|---|---|---|---|---|
| 11 | 873-716 | COVER | 1 | EA |
| 10 | 883-088 | LATCH | 2 | EA |
| 9 | 980003760 | M8 NUT | 4 | EA |
| 8 | 890000670 | M10 NUT | 1 | EA |
| 7 | 901-520 | DUST COVER | 5 | EA |
| 6 | 882-869-5 | BUS BAR | 1 | EA |
| 5 | 890009470 | TETHER | 1 | EA |
| 4 | 868-967 | BASE | 1 | EA |
| 3 | 908-067 | M8 STUD | 4 | EA |
| 2 | 908-068 | M10 STUD | 1 | EA |
| 1 | 883-094 | BOTTOM CAP | 2 | EA |

BILL OF MATERIAL

UNLESS OTHERWISE SPECIFIED, DIMENSIONS ARE IN MILLIMETERS. DIMENSIONS IN BRACKETS [ ] ARE INCHES.

UNLESS OTHERWISE SPECIFIED, DIMENSIONS DO NOT INCLUDE PLATING.

| | |
|---|---|
| ◎ | DENOTES CRITICAL CHARACTERISTICS. |
| CPK | DENOTES CPK DIMENSIONS, -MINIMUM CPK VALUE |
| (ST) | DENOTES A CHARACTERISTIC THAT PROVIDES AN INDICATION OF PROCESS PERFORMANCE. PROCEDURE FOR MEASUREMENT AND TRACKING TO BE DEFINED IN LITTELFUSE INSPECTION INSTRUCTIONS |
| CP | DENOTES CP DIMENSIONS, -MINIMUM CP VALUE MUST BE WITHIN THE DIMENSIONAL LIMITATIONS SHOWN ON DRAWING AND INITIALLY LOCATED TO ALLOW FOR MAXIMUM TOOL LIFE |

D

| COPIES TO | MATL SPEC | | |
|---|---|---|---|
| 1 9 18 | SEE NOTE | | |
| 2 10 19 | FINISH | | |
| 3 12 20 | SEE NOTE | | |
| 4 13 21 | DRW FYUE | DATE 26/Jun/18 | SCALE 1:1 |
| 5 14 23 | | | |
| 6 15 33 | CHK | DATE | SUPER DR |
| 7 16 43 | APPD | DATE | FINSH GOOD WT GRAMS/PIECE |
| 8 17 53 | | | |

TOLERANCES UNLESS OTHERWISE SPECIFIED (REF. ISO 2768-fH)

| DIMENSION | 0.5 - 3 | OVER 3 - UP TO 6 | OVER 6 - UP TO 30 | OVER 30 - UP TO 120 | OVER 120 - UP TO 400 |
|---|---|---|---|---|---|
| TOLERANCE | ±0.1 | ±0.1 | ±0.2 | ±0.3 | ±0.5 |

3RD ANGLE PROJECTION

TITLE UNSEALED 4-WAY ZCASE FUSE BOX

METRIC ASSEMBLY

Littelfuse® DES PLAINES, ILLINOIS 60016

| REVISION | DRWG. NO. | OUTLINE |
|---|---|---|
| A | OFHZ0002Z | |

CAD GENERATED DRAWING - NO PENCIL CHANGES ALLOWED