THIS DRAWING AND THE INFORMATION CONTAINED WITHIN IT ARE CONFIDENTIAL AND MAY NOT BE COPIED OR DISCLOSED WITHOUT THE WRITTEN PERMISSION OF LITTELFUSE.

REVISIONS				
ZONE	REV.	DESCRIPTION	DATE	APPROVED
	A	GCF#524055 INITIAL RELEASE	Jun./29/2021	D. ZHANG
A6, B8, D8	B	ECR#525201 UPDATED RELAY PARAMETERS	MAY./11/2022	D. ZHANG

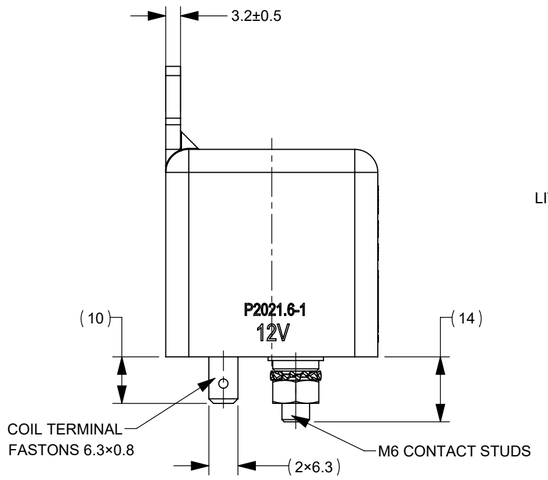

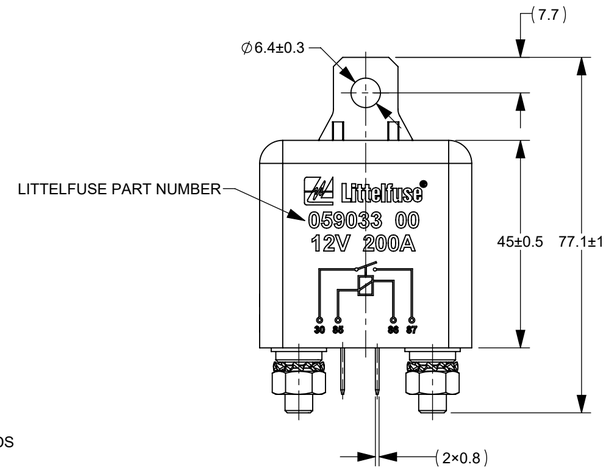

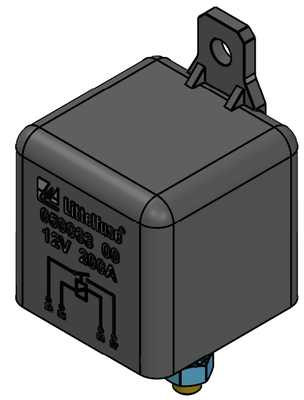

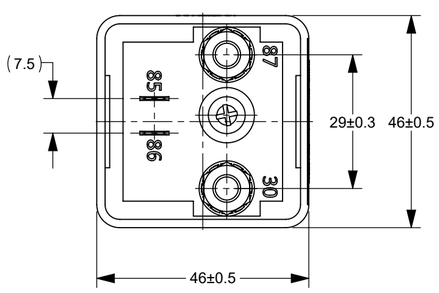

CIRCUIT SCHEMATIC DIAGRAM

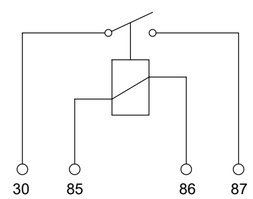

TABLE 1 (RELAY PARAMETERS)		
CONTACT VOLTAGE		MAX 24V DC
B RATED CONTACT CURRENT		100A
INTERMITTENT CURRENT		200A
RATED COIL VOLTAGE		12V DC
MAX ALLOWED COIL VOLTAGE		14.4V DC
NOMINAL OPERATING POWER		5.5W
PICK-UP VOLTAGE (@ 20°C~25°C)		MAX 9V DC
DROP-OUT VOLTAGE (@ 20°C~25°C)		MIN 1V DC
CONTACT VOLTAGE DROP		≤40mV@40 A B
OPERATE TIME		MAX 15ms B
RELEASE TIME		MAX 10ms
DIELECTRIC STRENGTH		1000VAC 50Hz 1MINUTE, LEAK CURRENT≤1mA
INSULATION RESISTANCE		≥100MΩ@500V DC
ELECTRICAL LIFE (CYCLES)	100A @ 24V DC	100,000
MECHANICAL LIFE (CYCLES)	NO LOAD	1,000,000

NOTES:
1. ALL DIMENSIONS ARE REFERENCE ONLY.
2. PRODUCT TYPE: NORMALLY OPEN RELAY.
3. MATERIAL:
3.1 HOUSING: THERMOPLASTIC PLASTICS.
3.2 CONTACTS: SILVER ALLOY.
3.3 CONTACT STUDS: COPPER ALLOY.
3.4 COIL TERMINALS: COPPER ALLOY.
4. CONNECTION STUD: M6 STUD, RECOMMENDED TORQUE: 3N●m~4.5N●m.
5. RELAY PARAMETERS ARE SHOWN IN TABLE 1.

DIMENSIONS ARE SHOWN IN MILLIMETERS. DIMENSIONS AND TOLERANCES ARE DEFINED ACCORDING TO ANSI/ASME Y14.5-1994.

PER CHI-NPD20-0008 PROCEDURE

●	FIT/ FUNCTION CRITICAL CHARACTERISTICS
<S>	SAFETY/ COMPLIANCE CRITICAL CHARACTERISTICS SYMBOL
CPK	DENOTES CPK DIMENSIONS MINIMUM CPK VALUE
ST	DENOTES A CHARACTERISTIC THAT PROVIDES AN INDICATION OF PROCESS PERFORMANCE.PROCEDURE FOR MEASUREMENTAND TRACKINGTO BE DEFINED IN LITTELFUSE INSPECTION INSTRUCTIONS
CP	DENOTES CP DIMENSIONS, -MINIMUM CP VALUE MUST BE WITHIN THE DIMENSIONAL LIMITATIONS SHOWN ON DRAWING AND INITIALLY LOCATED TO ALLOW FOR MAXIMUM TOOL LIFE

	NAME	DATE
DRAWN	JY. SHI	Jun./20/2021
CHECKED	J. LI	Jun./25/2021
	-	-
	-	-

FORM NO: CVP-PE40-0005 REV B

THIRD ANGLE PROJECTION

DO NOT SCALE DRAWING

Littelfuse
Expertise Applied | Answers Delivered

TITLE DDCNJ 100A 24V, 12V COIL RELAY

SIZE C | DWG. NO. OUTLINE OL-05903300 | REV. B

SCALE 1:1 | SHEET 1 OF 1