APPLICABLE SAE STANDARD OR RECOMMENDED PRACTICE SAE J259

956-4111

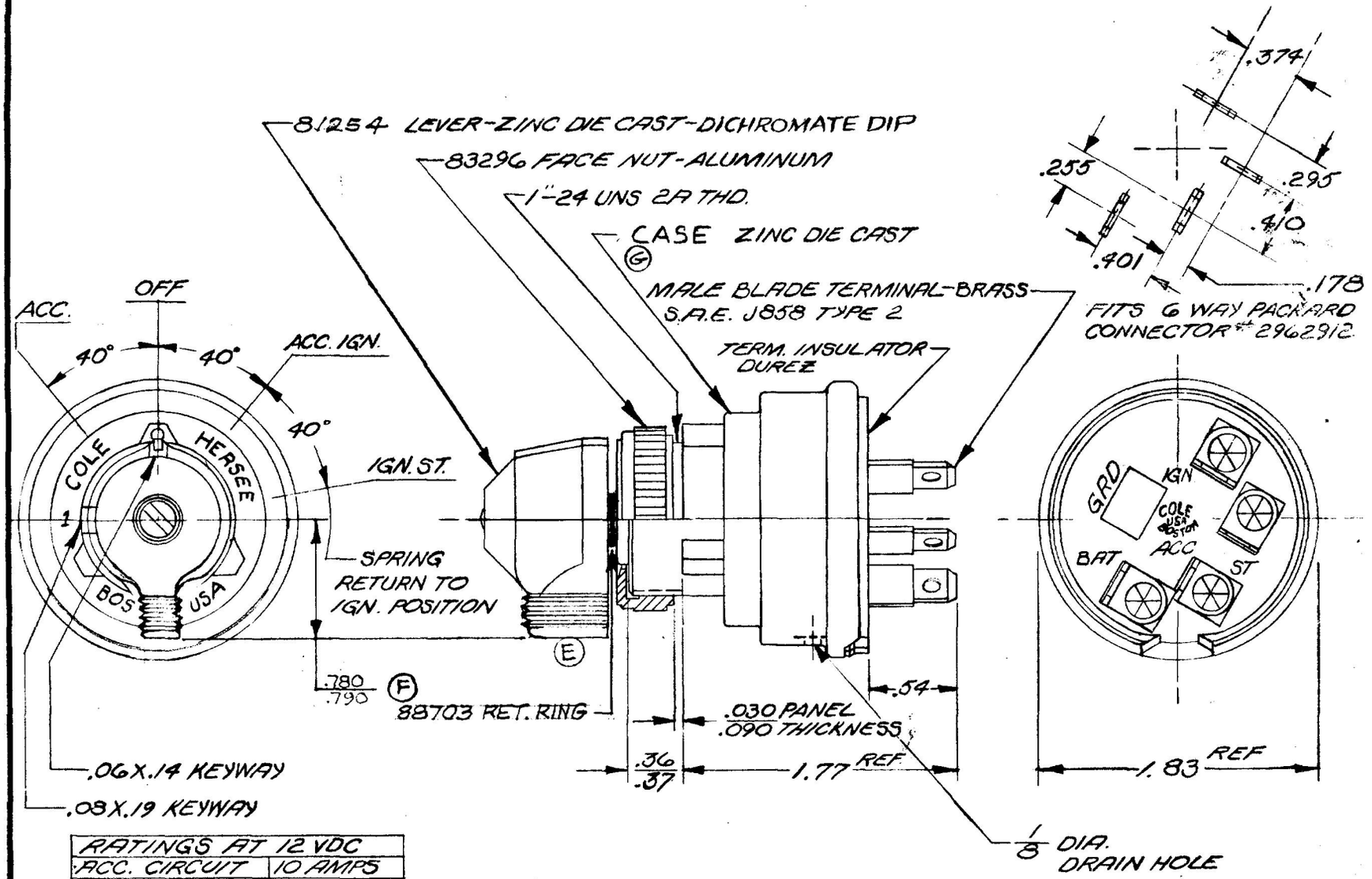

RATINGS AT 12 VDC	
ACC. CIRCUIT	10 AMPS
IGN.	10
ST.	5

DO NOT SCALE

LET	WAS	DATE	BY	LET	WAS	DATE	BY	MATERIAL	DRAWN	CHECKED	APPRV'D.	SCALE		DATE DRAWN
				G	HOUSING	8-13-82		—	N.B			FULL		1-18-68
				F	ADDED RING/20329	10-13-78	FR	FINISH	COLE-HERSEE COMPANY BOSTON, MASS. 02127, U.S.A.					DATE BLUEPRINT
				E	LEVER, 19848	4-6-77		—						
				D	SAE SPEC ADDED	3-5-74		TOLERANCES FRACTIONAL ± DECIMAL ±.010	4 POSITION IGN. & START SWITCH					956-4111
				C	NO CHANGE	3-21-73	JB							

SPAULDING CO., INC. 47570

COLE-HERSEE CO. TSE-#1034

Confidential Property of Cole Hersee