COVER PART	COVER OPENING POSITION	JAGUAR PART NO. OR LOGO
A	A C	LJE2850AA
B	A B C E	N/A

LTR	DATE	REVISION	CHK	APD
C	03/29/07	85414D-REDRAWN IN UG GMB		
D	08/31/07	000170EC/C - REMOVE USA FROM COVER BRK		
E	04/24/08	000463EC/D-CHG. NOTE 3 GMB		

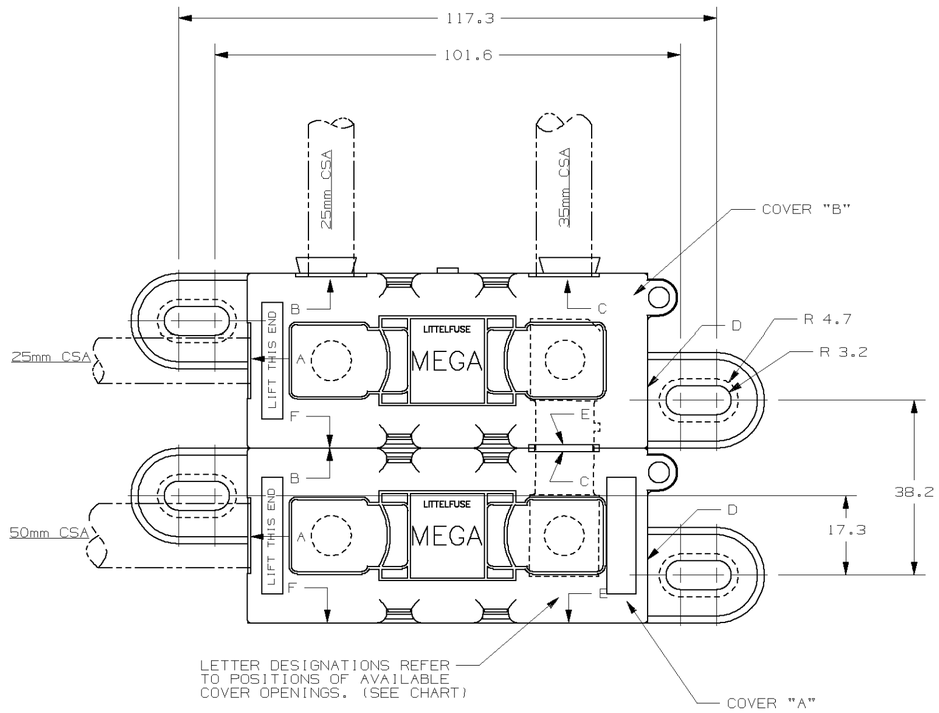

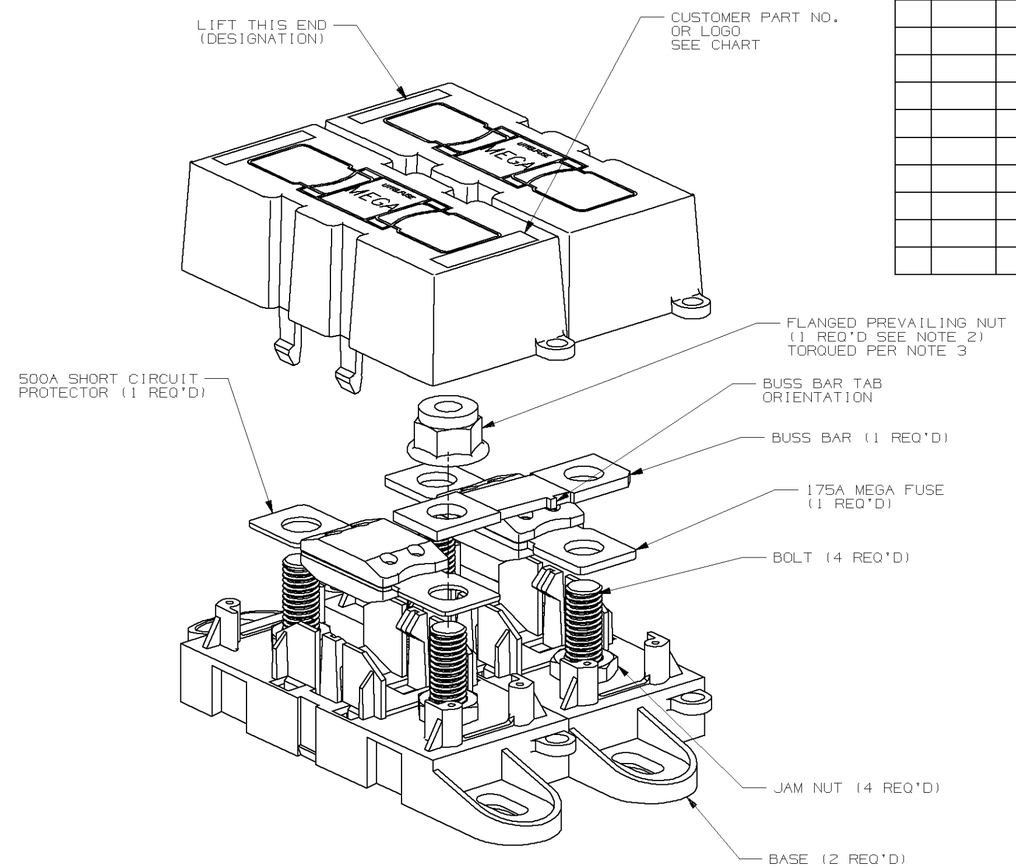

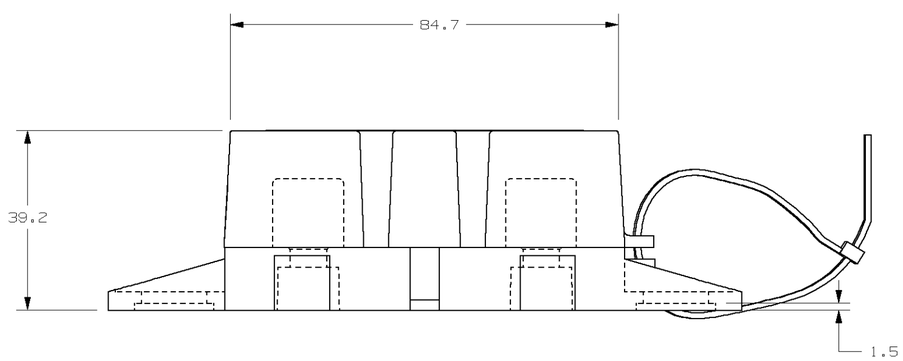

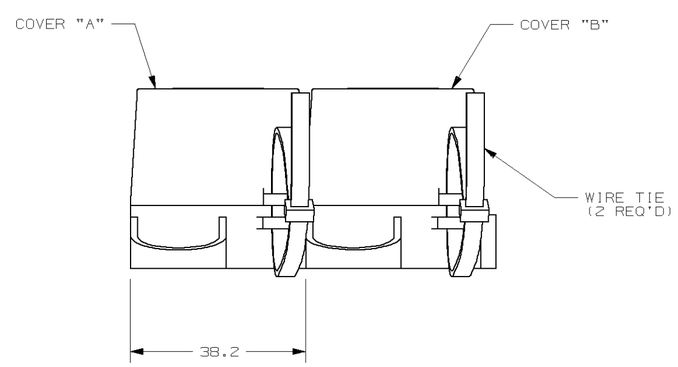

GENERAL NOTES:

1. COVER RETENTION TEST: MINIMUM FORCE OF 2 LBS. IS REQUIRED TO REMOVE COVER WHEN IT IS SUSPENDED UPSIDE DOWN. FORCE SHALL BE APPLIED THROUGH THE INNER HOLES (2) IN BASE. USE FIXTURE #T-C403 TO SUPPORT PART.

2. FLANGED PREVAILING NUT TO MEET THE FOLLOWING CRITERIA:
   FORD PART NO. W520202
   FINISH: S437.

3. TORQUE APPLIED TO NUT
   TORQUE REQUIREMENTS FOR THE HEX NUT USED TO SECURE THE BUSSBAR OR THE CUSTOMER RING TERMINAL TO THE MEGA FUSE TO BE:
   8mm NUT - 12-18 NEWTON METERS [106-159 IN-LBS]

4. DUAL HOLDER MEETS L/F VALIDATION TEST SPEC. VS-005005.

5. MATERIALS:
   * BODY - GLASS FILLED THERMOPLASTIC
     COLOR - BLACK
   * COVER - THERMOPLASTIC
     COLOR - BLACK
   * WIRE TIE - THERMOPLASTIC
     COLOR - BLACK
   * STUDS & NUTS - M8 X 1.25 STEEL
     ZINC PLATE WITH TRIVALENT CHROMATE, LEACHED AND SEALED, INTEGRAL TORQUE CONTROL LUBRICANT FINISH
     (MEETS 96 HR. ASTM STD. B-117 SALT SPRAY REQ.)
   * PREVAILING TORQUE ELEMENT - NYLON, COLOR OPTIONAL

METRIC

NO	COMPONENT NO	DESCRIPTION	QTY/M	U/M
-				
-				
-				

BILL OF MATERIAL

UNLESS OTHERWISE SPECIFIED, DIMENSIONS ARE IN MILLIMETERS. DIMENSIONS IN BRACKETS [ ] ARE INCHES

UNLESS OTHERWISE SPECIFIED, DIMENSIONS DO NOT INCLUDE PLATING.

◎	DENOTES CRITICAL CHARACTERISTICS.
CPK	DENOTES CPK DIMENSIONS, -MINIMUM CPK VALUE
⟨ST⟩	DENOTES A CHARACTERISTIC THAT PROVIDES AN INDICATION OF PROCESS PERFORMANCE. PROCEDURE FOR MEASUREMENT AND TRACKING TO BE DEFINED IN LITTELFUSE INSPECTION INSTRUCTIONS
CP	DENOTES CP DIMENSIONS, -MINIMUM CP VALUE MUST BE WITHIN THE DIMENSIONAL LIMITATIONS SHOWN ON DRAWING AND INITIALLY LOCATED TO ALLOW FOR MAXIMUM TOOL LIFE

COPIES TO: 1 9 18 / 2 10 19 / 3 12 20 / 4 13 21 / 5 14 23 / 6 15 33 / 7 16 43 / 8 17 53

MATL SPEC

FINISH

DRW	DATE	SCALE
D. GLAB	06/27/05	1:1
CHK	DATE	SUPER DR
APPD	DATE	FINSH GOOD WT GRAMS/PIECE

TOLERANCE UNLESS OTHERWISE SPECIFIED
ONE PLACE DEC +/-.3 THREE PLACE DEC +/-.100
TWO PLACE DEC +/-.25 ANGULAR +/-1°

3RD ANGLE PROJECTION

TITLE DUAL MEGAFUSE HOLDER FOR 500A & 175A (JAGUAR LJE2850AA)

Littelfuse® DES PLAINES, ILLINOIS 60016

REVISION	DRWG. NO.	OUTLINE
E	02982005ZXT	

CAD GENERATED DRAWING - NO PENCIL CHANGES ALLOWED