THIS DRAWING AND THE INFORMATION CONTAINED WITHIN IT ARE CONFIDENTIAL AND MAY NOT BE COPIED OR DISCLOSED WITHOUT THE WRITTEN PERMISSION OF LITTELFUSE.

REVISIONS				
ZONE	REV.	DESCRIPTION	DATE	APPROVED
	A	GCF#524228 INITIAL RELEASE	JUL./25/2021	D. ZHANG

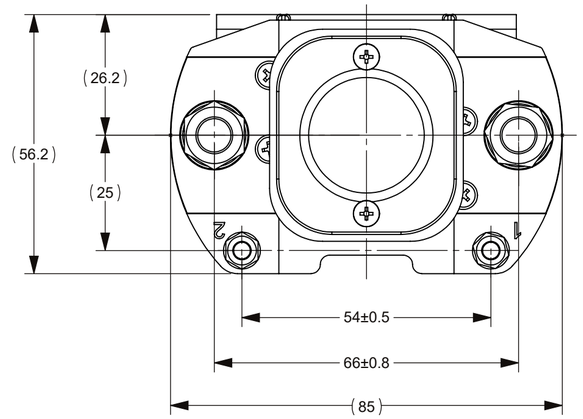

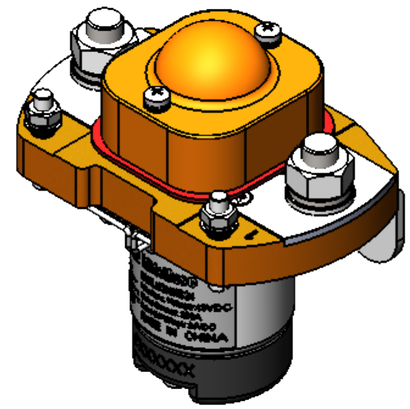

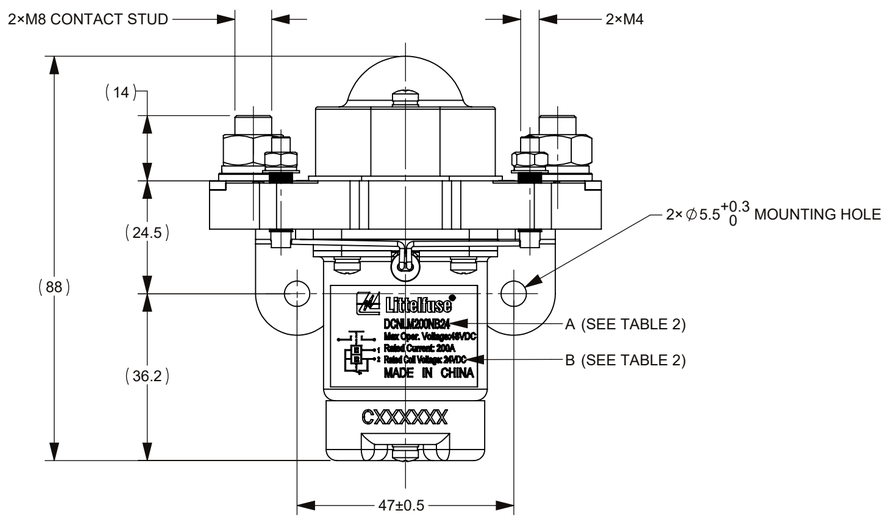

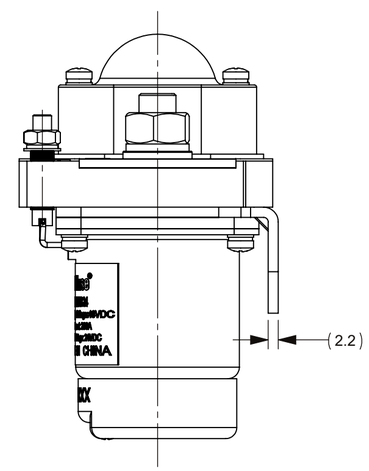

CIRCUIT SCHEMATIC DIAGRAM

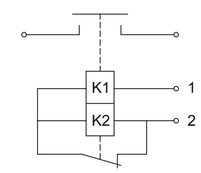

TABLE 1: TECHNICAL PARAMETERS				
ITEM		PARAMETER		
		DCNLM200NB12	DCNLM200NB24	DCNLM200NB48
RATED COIL VOLTAGE		12V DC	24V DC	48V DC
HOLD POWER	START POWER	MAX 180W		
	MAINTAIN POWER	MAX 9W		
OPERATING VOLTAGE IN COLD STATE AT (20±5)°C	PICKUP	MAX 8.4V DC	MAX 16.8V DC	MAX 33.6V DC
	RELEASE	MIN 1V DC	MIN 2V DC	MIN 4V DC
OPERATE TIME		MAX 40ms		
RELEASE TIME		MAX 20ms		
BOUNCE TIME		MAX 5ms		
RATED CONTACT VOLTAGE		48V DC		
MAXIMUM CONTACT VOLTAGE		60V DC		
RATED CONTACT CURRENT		200A		
CONTACT VOLTAGE DROP		≤50mV@100 A		
LIMIT BREAKING ABILITY		4Ie/5ms,1CYCLES		
DIELECTRIC STRENGTH		1000V AC, 50Hz,1min., LEAKAGE CURRENT ≤1 mA		
INSULATION RESISTANCE		≥2MΩ@500VDC		
ELECTRIC LIFE		6000 CYCLES		
MECHANICAL LIFE		100,000 CYCLES		
WORKING DUTY		CONTINUOUS		

NOTES:
1. ALL SIZES ARE FOR REFERENCE ONLY.
2. MATERIALS AND FINISHED:
2.1 BASE: THERMOSETTING PLASTIC, UL94V-0.
2.2 CONTACTS: SILVER ALLOY.
2.3 COIL STUD: COPPER ALLY, SILVER PLATED.
3. PRODUCT TECHNICAL PARAMETERS: SEE TABLE 1.
4. PRODUCT AND NAMEPLATE(THE CHARACTER CONTENT AT "A" AND "B") CONFIGURATION SEE TABLE 2.
5. CONTACT ARRANGEMENT: SPST-NO.
6. CONNECTION STUD: M8 STUD, RECOMMENDED TORQUE 9 N•m ~ 11 N•m; M4 STUD, RECOMMENDED TORQUE 1.7 N•m ~ 2.5 N•m.
7. MOUNTING: M5 BOLT, RECOMMENDED TORQUE 4 N•m ~ 5 N•m.

TABLE 2		
PRODUCT NUMBER	A	B
DCNLM200NB12	DCNLM200NB12	Rated Coil Voltage: 12VDC
DCNLM200NB24	DCNLM200NB24	Rated Coil Voltage: 24VDC
DCNLM200NB48	DCNLM200NB48	Rated Coil Voltage: 48VDC

DIMENSIONS ARE SHOWN IN MILLIMETERS. DIMENSIONS AND TOLERANCES ARE DEFINED ACCORDING TO ANSI/ASME Y14.5-1994.

PER CHI-NPD20-0008 PROCEDURE

●	FIT/ FUNCTION CRITICAL CHARACTERISTICS
<S>	SAFETY/ COMPLIANCE CRITICAL CHARACTERISTICS SYMBOL
CPK	DENOTES CPK DIMENSIONS MINIMUM CPK VALUE
⟨ST⟩	DENOTES A CHARACTERISTIC THAT PROVIDES AN INDICATION OF PROCESS PERFORMANCE.PROCEDURE FOR MEASUREMENTAND TRACKINGTO BE DEFINED IN LITTELFUSE INSPECTION INSTRUCTIONS
CP	DENOTES CP DIMENSIONS, -MINIMUM CP VALUE MUST BE WITHIN THE DIMENSIONAL LIMITATIONS SHOWN ON DRAWING AND INITIALLY LOCATED TO ALLOW FOR MAXIMUM TOOL LIFE

	NAME	DATE
DRAWN	MJ. DAI	JUL./25/2021
CHECKED	J. LI	JUL./30/2021
	-	-
	-	-

FORM NO: CVP-PE40-0005 REV B

THIRD ANGLE PROJECTION

DO NOT SCALE DRAWING

Littelfuse
Expertise Applied | Answers Delivered

TITLE
DCNL 200A 48V CONTACTOR

SIZE	DWG. NO.		REV.
C	OUTLINE	OL-DCNLM200NB CHART	A

SCALE 1:1 | SHEET 1 OF 1