IXYS UK WESTCODE

Date:- 03 August 2012

Data Sheet Issue:- K1

Fast Turn-off Thyristor

Types P0389WC04# & P0389WC08#

Absolute Maximum Ratings

	VOLTAGE RATINGS	MAXIMUM LIMITS	UNITS
V_{DRM}	Repetitive peak off-state voltage, (note 1)	400-800	V
V_{DSM}	Non-repetitive peak off-state voltage, (note 1)	400-800	V
V_{RRM}	Repetitive peak reverse voltage, (note 1)	400-800	V
V_{RSM}	Non-repetitive peak reverse voltage, (note 1)	500-900	V

	OTHER RATINGS	MAXIMUM LIMITS	UNITS
$I_{T(AV)}$	Mean on-state current, T_{sink}=55°C, (note 2)	389	A
$I_{T(AV)}$	Mean on-state current. T_{sink}=85°C, (note 2)	150	A
$I_{T(RMS)}$	Nominal RMS on-state current, T_{sink}=25°C, (note 2)	780	A
$I_{T(d.c.)}$	D.C. on-state current, T_{sink}=25°C, (note 4)	650	A
I_{TSM}	Peak non-repetitive surge t_p=10ms, V_{RM}=0.6V_{RRM}, (note 5)	5000	A
I_{TSM2}	Peak non-repetitive surge t_p=10ms, V_{RM}≤10V, (note 5)	5500	A
I^2t	I^2t capacity for fusing t_p=10ms, V_{RM}=0.6V_{RRM}, (note 5)	125×10^3	A^2s
I^2t	I^2t capacity for fusing t_p=10ms, V_{RM}≤10V, (note 5)	151×10^3	A^2s
$(di/dt)_{cr}$	Maximum rate of rise of on-state current (repetitive), (Note 6)	500	A/µs
	Maximum rate of rise of on-state current (non-repetitive), (Note 6)	1000	A/µs
V_{FGM}	Peak forward gate voltage	12	V
I_{FGM}	Peak forward gate current	18	A
V_{RGM}	Peak reverse gate voltage	5	V
$P_{G(AV)}$	Mean forward gate power	1.5	W
P_{GM}	Peak forward gate power (100µs pulse width)	60	W
V_{GD}	Non-trigger gate voltage, (Note 7)	0.25	V
T_{HS}	Operating temperature range	-40 to +125	°C
T_{stg}	Storage temperature range	-40 to +150	°C

Notes:-
1) De-rating factor of 0.13% per °C is applicable for T_j below 25°C.
2) Double side cooled, single phase; 50Hz, 180° half-sinewave.
3) Single side cooled, single phase; 50Hz, 180° half-sinewave.
4) Double side cooled.
5) Half-sinewave, 125°C T_j initial.
6) V_D=80% V_{DRM}, I_{FG}=1A, t_r≤1µs, T_{case}=125°C.
7) Rated V_{DRM}.

Characteristics

	PARAMETER	MIN.	TYP.	MAX.	TEST CONDITIONS (Note 1)	UNITS
V_{TM}	Maximum peak on-state voltage	-	-	1.68	I_{TM}=715A	V
V_{T0}	Threshold voltage	-	-	1.05		V
r_T	Slope resistance	-	-	0.88		mΩ
$(dv/dt)_{cr}$	Critical rate of rise of off-state voltage	200	-	-	V_D=80% V_{DRM}	V/µs
I_{DRM}	Peak off-state current	-	-	30	Rated V_{DRM}	mA
I_{RRM}	Peak reverse current	-	-	30	Rated V_{RRM}	mA
V_{GT}	Gate trigger voltage	-	-	3.0	T_j=25°C	V
I_{GT}	Gate trigger current	-	-	200	T_j=25°C V_D=6V, I_T=1A	mA
I_H	Holding current	-	-	600	T_j=25°C	mA
Q_{rr}	Recovered charge	-	30	-	I_{TM}=300A, t_p=500µs, di/dt=20A/µs, V_r=50V	µC
Q_{ra}	Recovered charge, 50% Chord	-	18	-		µC
t_q	Turn-off time (note 2)	10	-	30	I_{TM}=300A, t_p=500µs, di/dt=20A/µs, V_r=50V, V_{dr}=80%V_{DRM}, dV_{dr}/dt=20V/µs	µs
		12	-	15	I_{TM}=300A, t_p=500µs, di/dt=50A/µs, V_r=50V, V_{dr}=80%V_{DRM}, dV_{dr}/dt=200V/µs	
R_{thJK}	Thermal resistance, junction to heatsink	-	-	0.095	Double side cooled	K/W
		-	-	0.190	Single side cooled	K/W
F	Mounting force	3.3	-	5.5		kN
W_t	Weight	-	70	-		g

Notes:-
1) Unless otherwise indicated T_j=125°C.
2) The required t_q (specified with dV_{dr}/dt=200V/µs) is represented by an '#' in the device part number. See ordering information for details of t_q codes.

Notes on Ratings and Characteristics

1.0 Voltage Grade Table

Voltage Grade	V_{DRM} V_{DSM} V_{RRM} V	V_{RSM} V	V_D V_R DC V
04	400	500	260
06	600	700	420
08	800	900	540

2.0 Extension of Voltage Grades

This report is applicable to other and higher voltage grades when supply has been agreed by Sales/Production.

3.0 Extension of Turn-off Time

This Report is applicable to other t_q/re-applied dv/dt combinations when supply has been agreed by Sales/Production.

4.0 Repetitive dv/dt

Higher dv/dt selections are available up to 1000V/µs on request.

5.0 De-rating Factor

A blocking voltage de-rating factor of 0.13%/°C is applicable to this device for T_j below 25°C.

6.0 Rate of rise of on-state current

The maximum un-primed rate of rise of on-state current must not exceed 1500A/µs at any time during turn-on on a non-repetitive basis. For repetitive performance, the on-state rate of rise of current must not exceed 1000A/µs at any time during turn-on. Note that these values of rate of rise of current apply to the total device current including that from any local snubber network.

7.0 Square wave ratings

These ratings are given for load component rate of rise of forward current of 100 and 500 A/µs.

8.0 Duty cycle lines

The 100% duty cycle is represented on all the ratings by a straight line. Other duties can be included as parallel to the first.

9.0 Maximum Operating Frequency

The maximum operating frequency is set by the on-state duty, the time required for the thyristor to turn off (t_q) and for the off-state voltage to reach full value (t_v), i.e.

$$f_{\max} = \frac{1}{t_{pulse} + t_q + t_v}$$

10.0 On-State Energy per Pulse Characteristics

These curves enable rapid estimation of device dissipation to be obtained for conditions not covered by the frequency ratings.

Let E_p be the Energy per pulse for a given current and pulse width, in joules
Let $R_{th(J-Hs)}$ be the steady-state d.c. thermal resistance (junction to sink)
and T_{SINK} be the heat sink temperature.

Then the average dissipation will be:

$$W_{AV} = E_P \cdot f \text{ and } T_{SINK(\max.)} = 125 - \left(W_{AV} \cdot R_{th(J-Hs)}\right)$$

11.0 Reverse recovery ratings

(i) Q_{ra} is based on 50% I_{rm} chord as shown in Fig. 1 below.

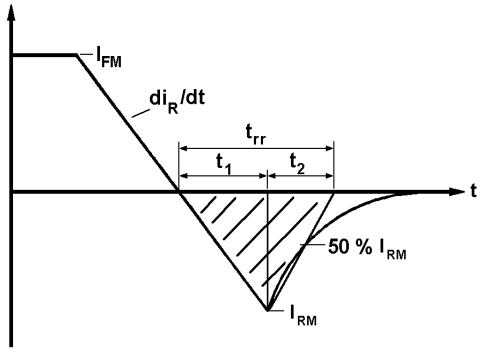

Fig. 1

(ii) Q_{rr} is based on a 100µs integration time.

i.e.
$$Q_{rr} = \int_0^{100\mu s} i_{rr}.dt$$

(iii)
$$K\ Factor = \frac{t1}{t2}$$

12.0 Reverse Recovery Loss

12.1 Determination by Measurement

From waveforms of recovery current obtained from a high frequency shunt (see Note 1, Page 5) and reverse voltage present during recovery, an instantaneous reverse recovery loss waveform must be constructed. Let the area under this waveform be E joules per pulse. A new heat sink temperature can then be evaluated from:

$$T_{SINK(new)} = T_{SINK(original)} - E \cdot \left(k + f \cdot R_{th(J-Hs)}\right)$$

where k = 0.227 (°C/W)/s

E = Area under reverse loss waveform per pulse in joules (W.s.)
f = rated frequency Hz at the original heat sink temperature.
$R_{th(J-Hs)}$ = d.c. thermal resistance (°C/W).

The total dissipation is now given by:

$$W_{(TOT)} = W_{(original)} + E \cdot f$$

12.2 Determination without Measurement

In circumstances where it is not possible to measure voltage and current conditions, or for design purposes, the additional losses E in joules may be estimated as follows.

Let E be the value of energy per reverse cycle in joules (curves in Figure 9).
Let f be the operating frequency in Hz

$$T_{SINK(new)} = T_{SINK(original)} - \left(E \cdot R_{th} \cdot f\right)$$

Where $T_{SINK\ (new)}$ is the required maximum heat sink temperature and
$T_{SINK\ (original)}$ is the heat sink temperature given with the frequency ratings.

A suitable R-C snubber network is connected across the thyristor to restrict the transient reverse voltage to a peak value (V_{rm}) of 67% of the maximum grade. If a different grade is being used or V_{rm} is other than 67% of Grade, the reverse loss may be approximated by a pro rata adjustment of the maximum value obtained from the curves.

12.3 Reverse Recovery Loss by Measurement

This thyristor has a low reverse recovered charge and peak reverse recovery current. When measuring the charge care must be taken to ensure that:

(a) a.c. coupled devices such as current transformers are not affected by prior passage of high amplitude forward current.
(b) A suitable, polarised, clipping circuit must be connected to the input of the measuring oscilloscope to avoid overloading the internal amplifiers by the relatively high amplitude forward current signal
(c) Measurement of reverse recovery waveform should be carried out with an appropriate critically damped snubber, connected across diode anode to cathode. The formula used for the calculation of this snubber is shown below:

$$R^2 = 4 \cdot \frac{V_r}{C_S \cdot {}^{di}\!/_{dt}}$$

Where: V_r = Commutating source voltage
C_S = Snubber capacitance
R = Snubber resistance

13.0 Gate Drive

The recommended pulse gate drive is 20V, 20Ω with a short-circuit current rise time of not more than 1µs. This gate drive must be applied when using the full di/dt capability of the device.

The duration of pulse may need to be configured with respect to the application but should be no shorter than 20µs, otherwise an increase in pulse current could be needed to supply the resulting increase in charge to trigger.

Curves

Figure 1 - On-state characteristics of Limit device

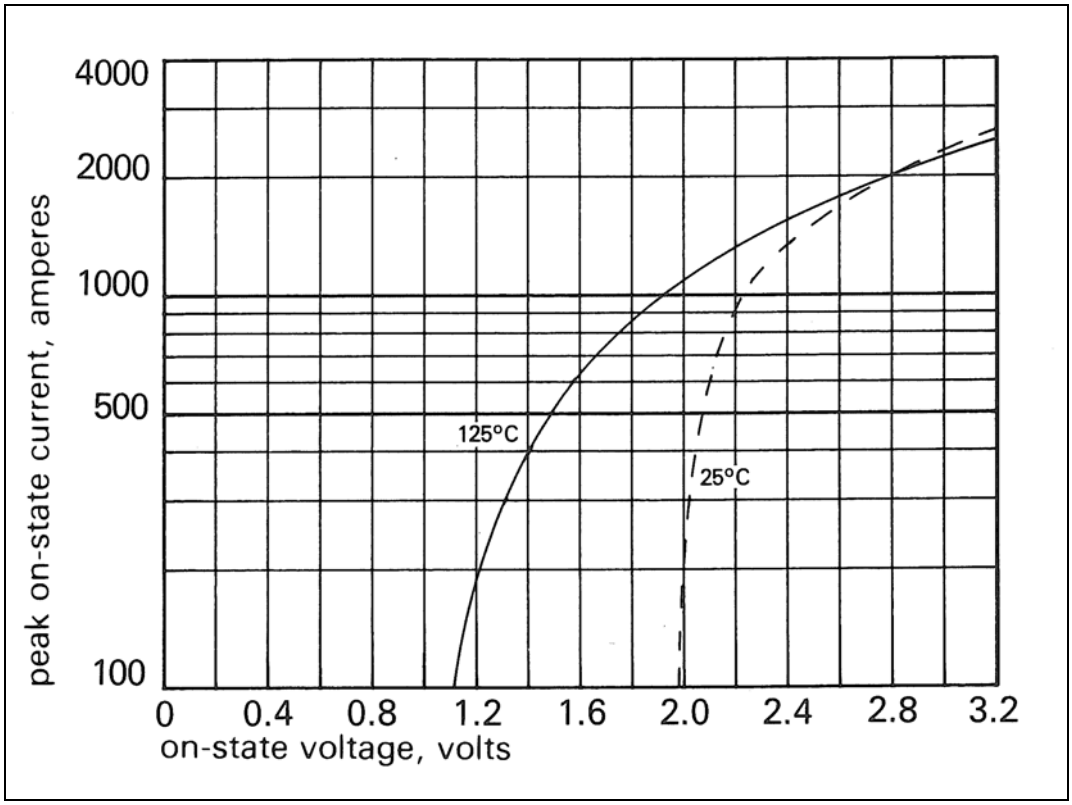

Figure 2 - Transient thermal impedance

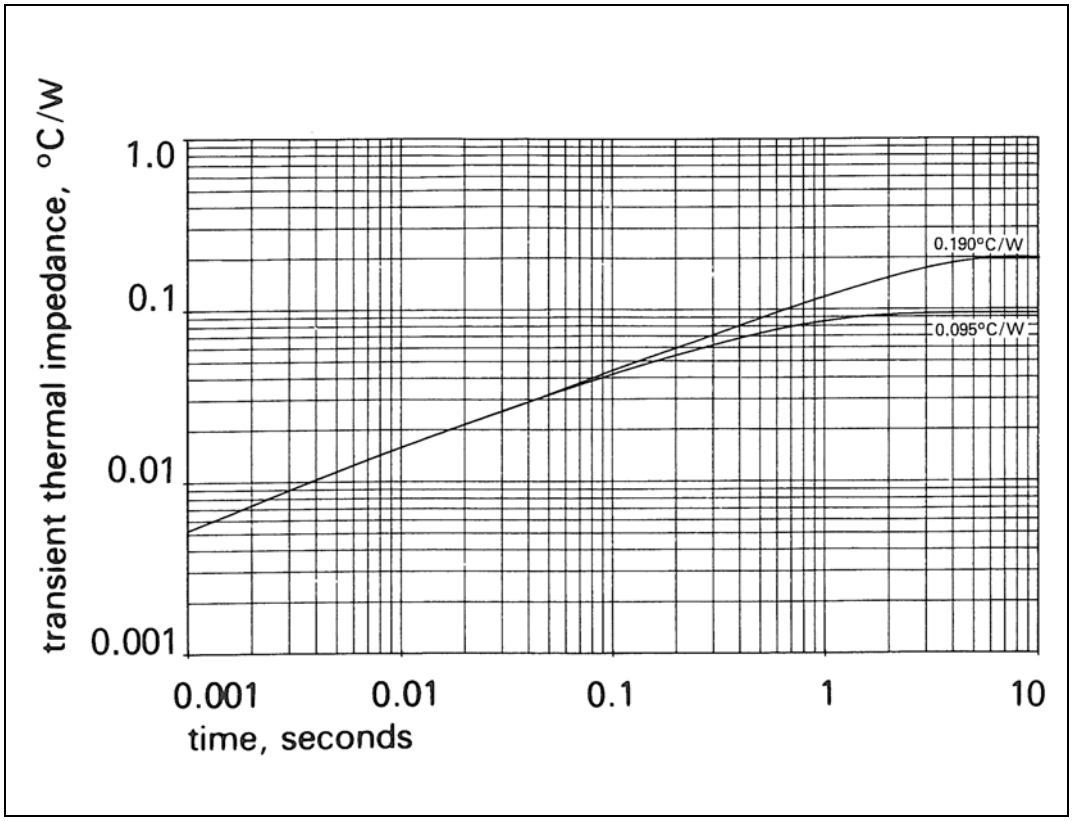

Figure 3 - Gate characteristics at 25°C junction temperature

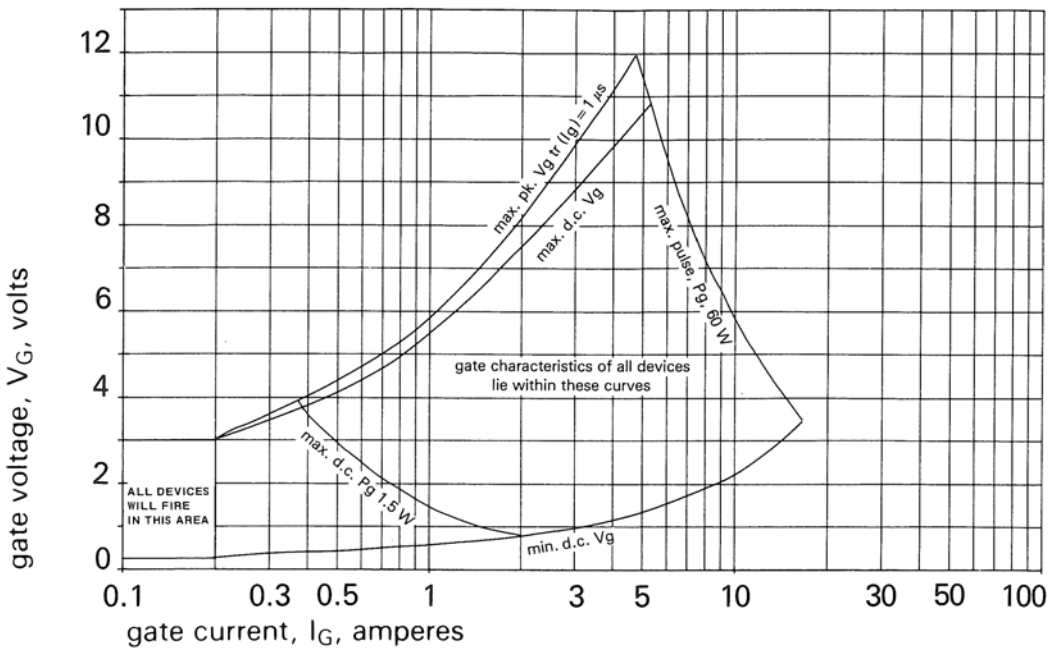

Figure 4 - Gate trigger characteristic

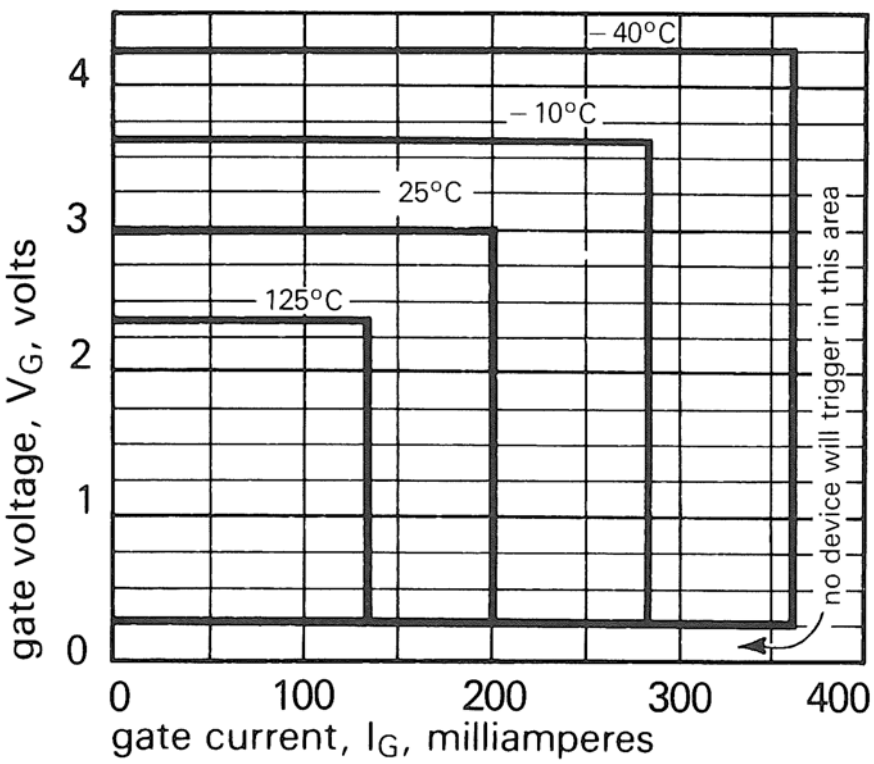

Trigger point of all thyristors lie within the areas shown.
Gate drive load line must lie outside appropriate I_G/V_G rectangle

Figure 5 – Typical recovered charge

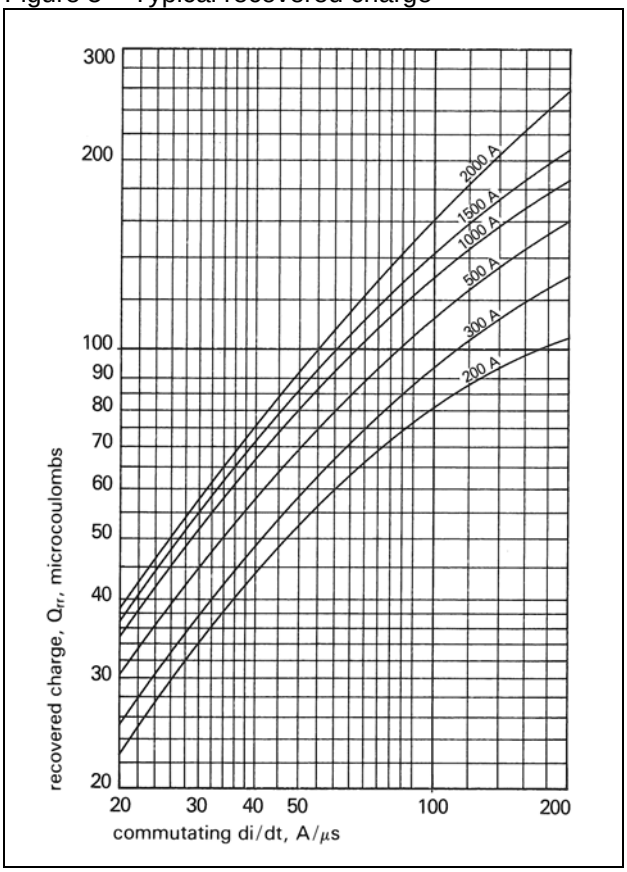

Figure 6 - Sine wave frequency ratings

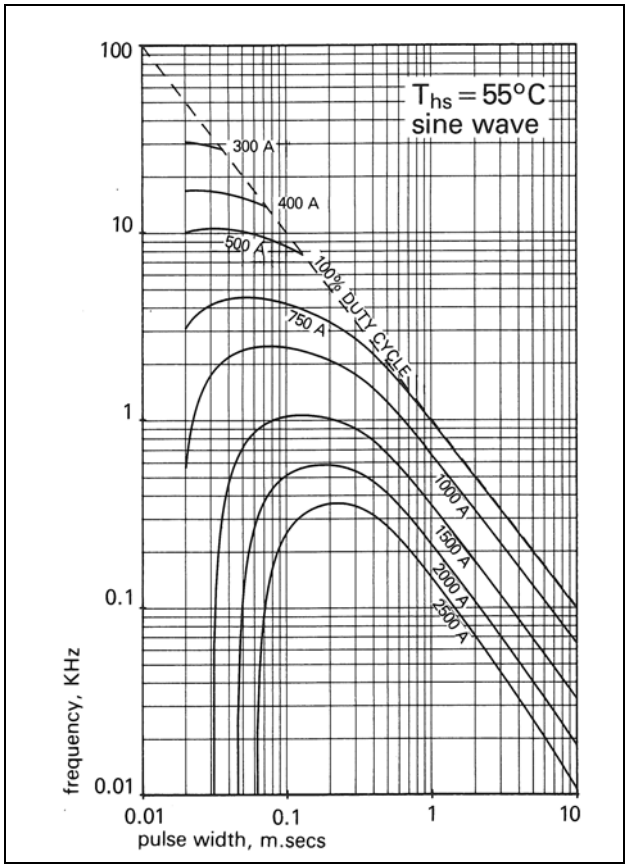

Figure 7 - Sine wave frequency ratings

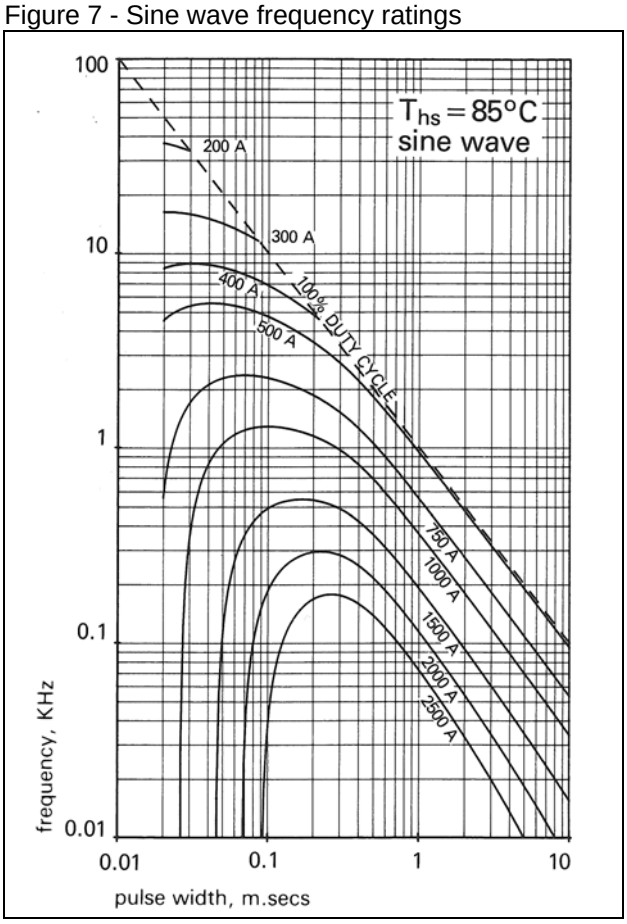

Figure 8 - Sine wave energy per pulse

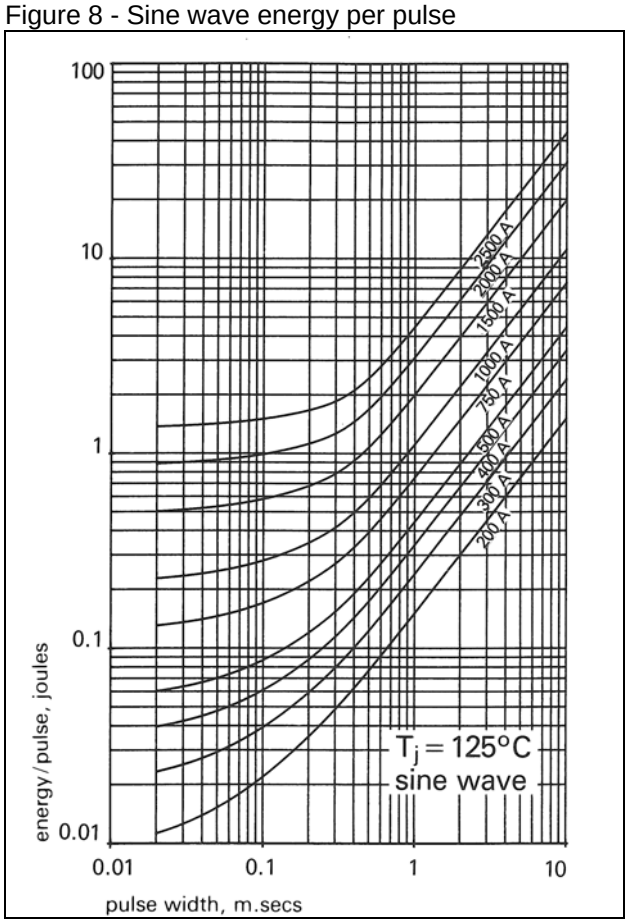

Figure 9 - Square wave frequency ratings

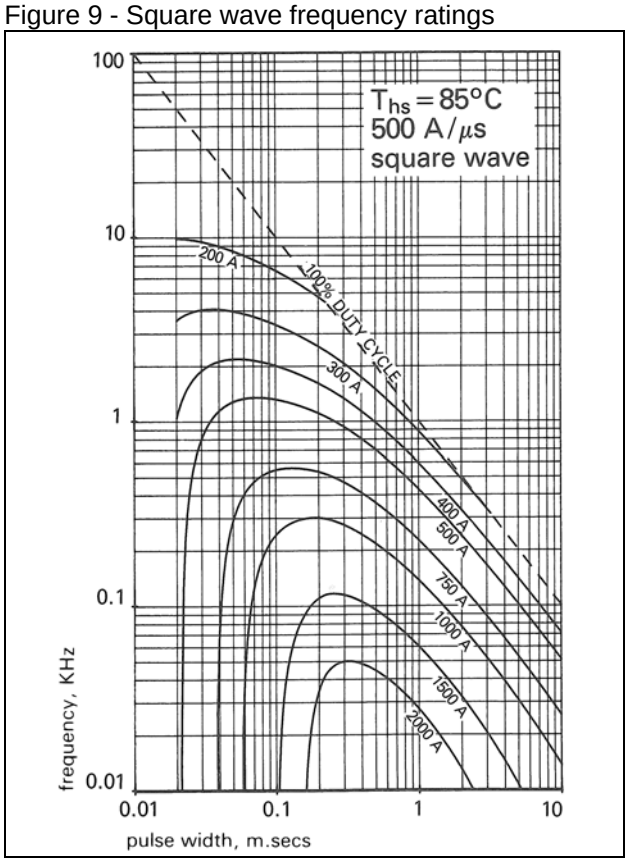

Figure 10 - Square wave frequency ratings

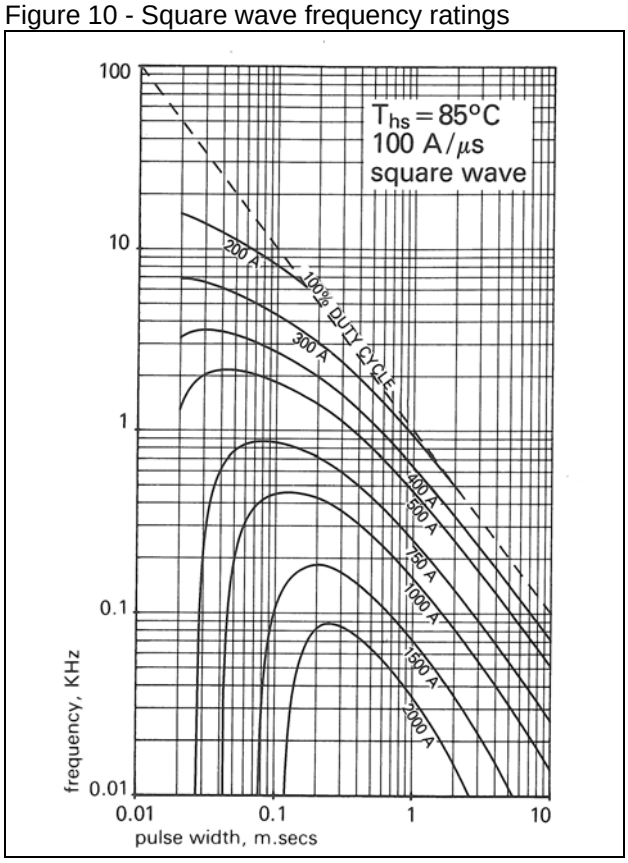

Figure 11 - Square wave frequency ratings

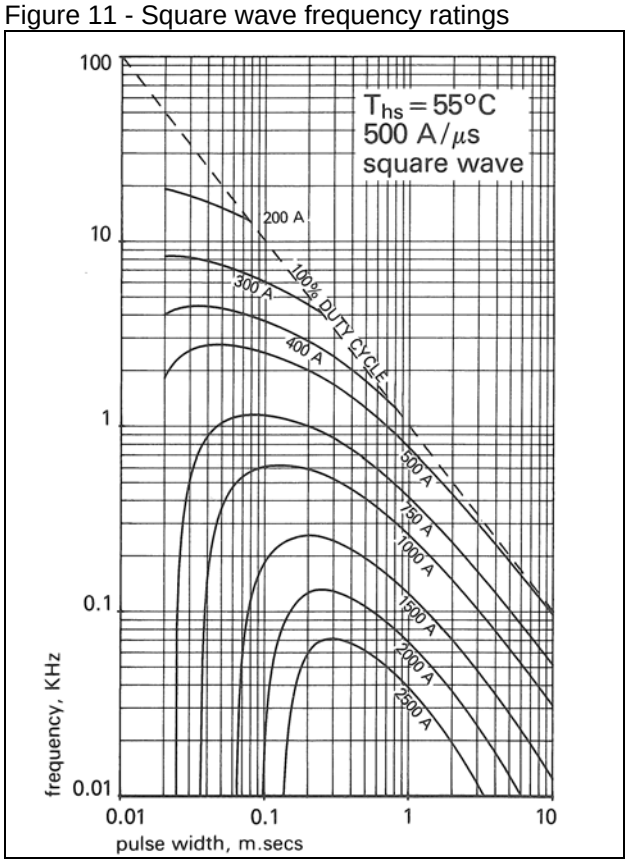

Figure 12 - Square wave frequency ratings

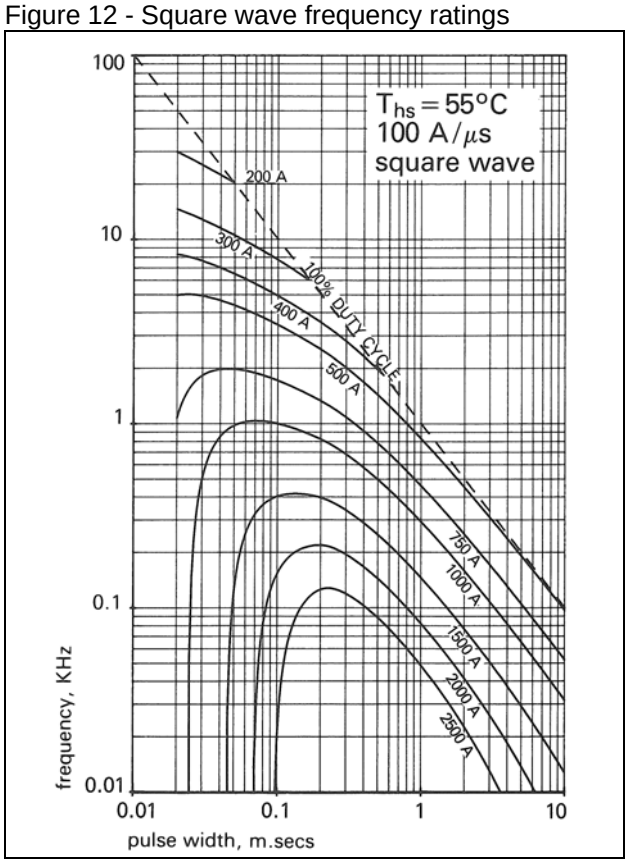

Figure 13 - Square wave energy per pulse

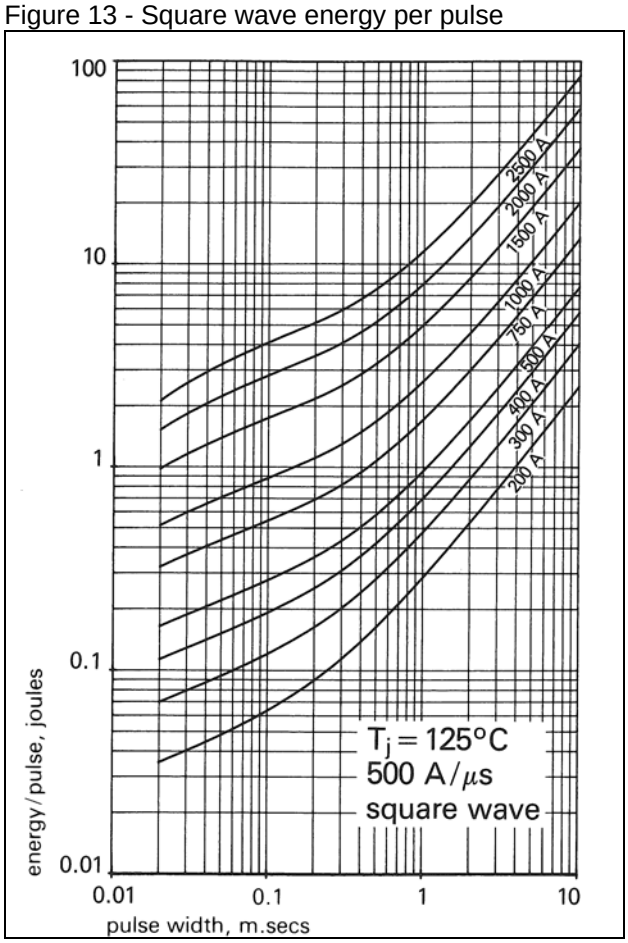

Figure 14 - Square wave energy per pulse

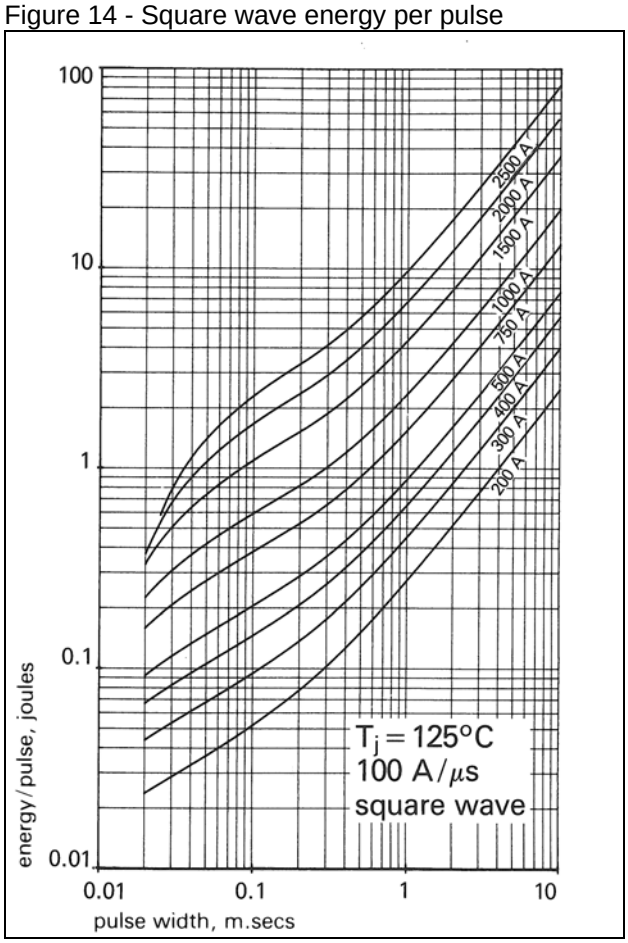

Figure 15 – Maximum reverse recovery energy loss per pulse at T_j = 125°C and V_{rrm} = 536 volts

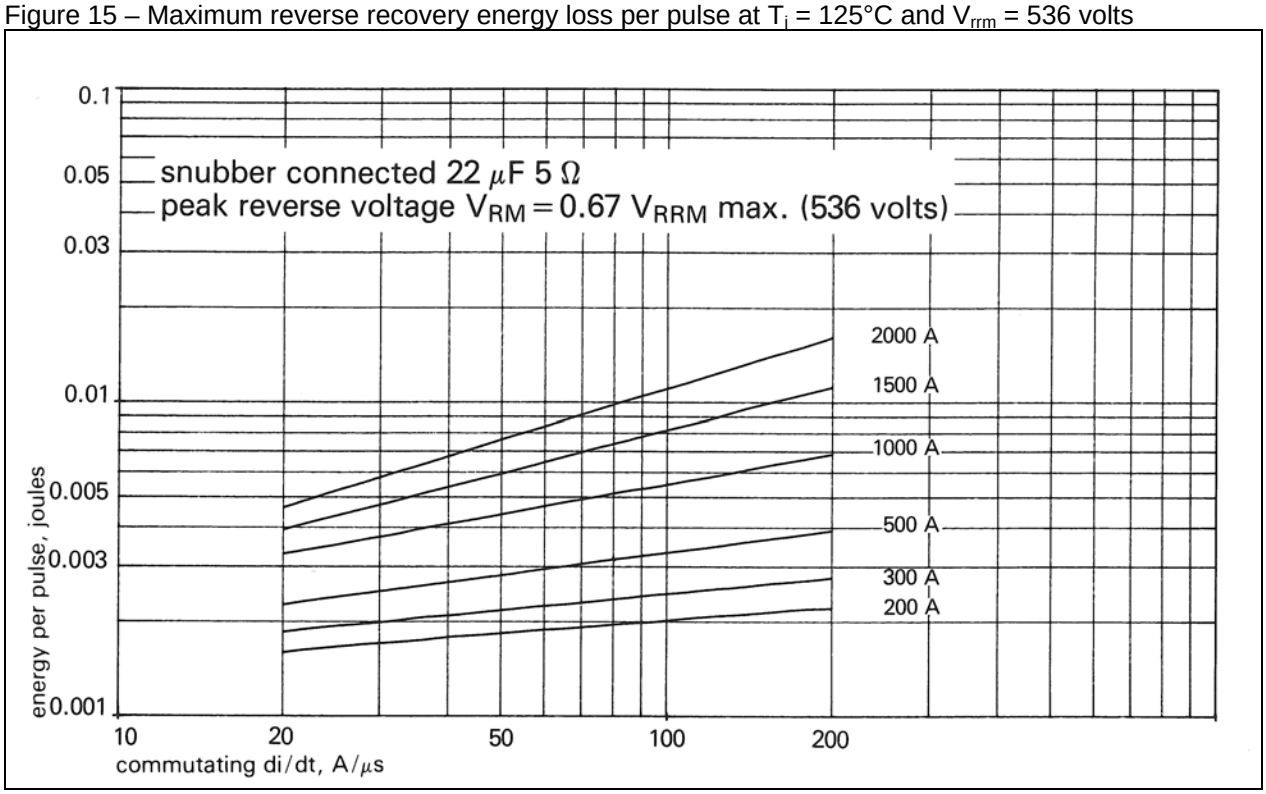

Figure 16 - Maximum surge and I2t Ratings

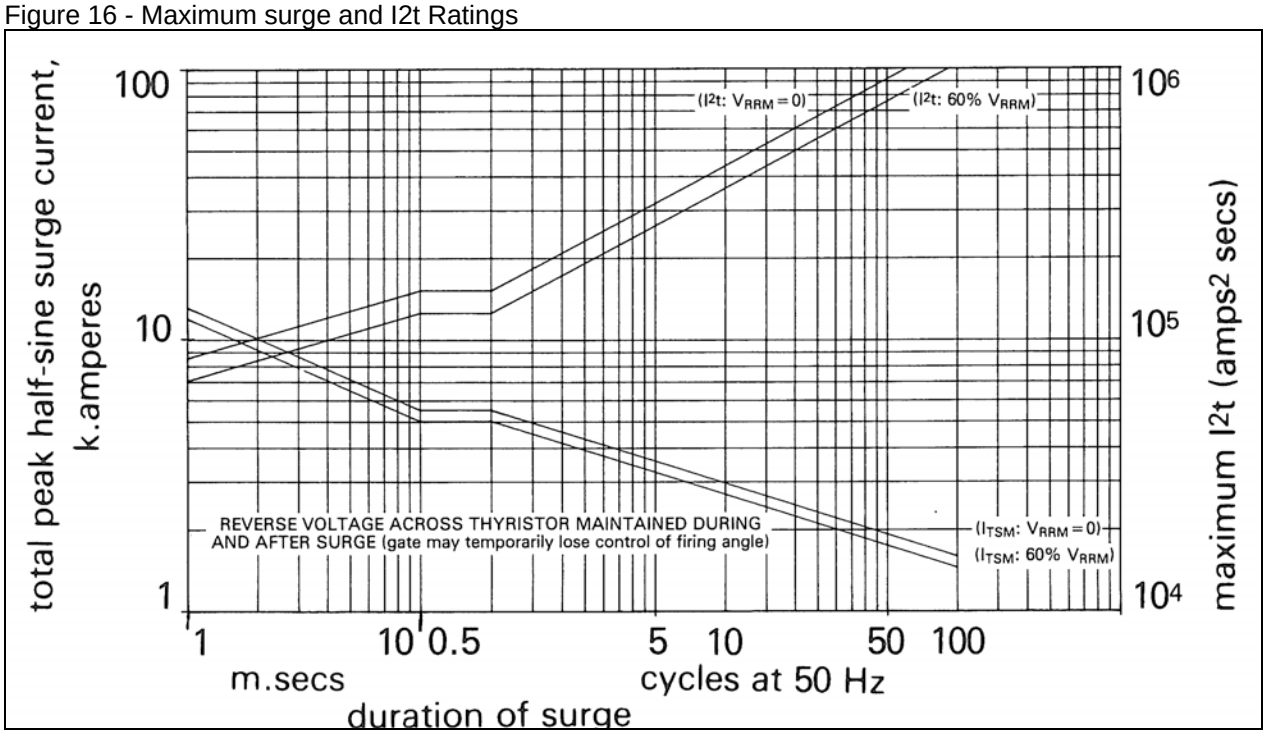

Outline Drawing & Ordering Information

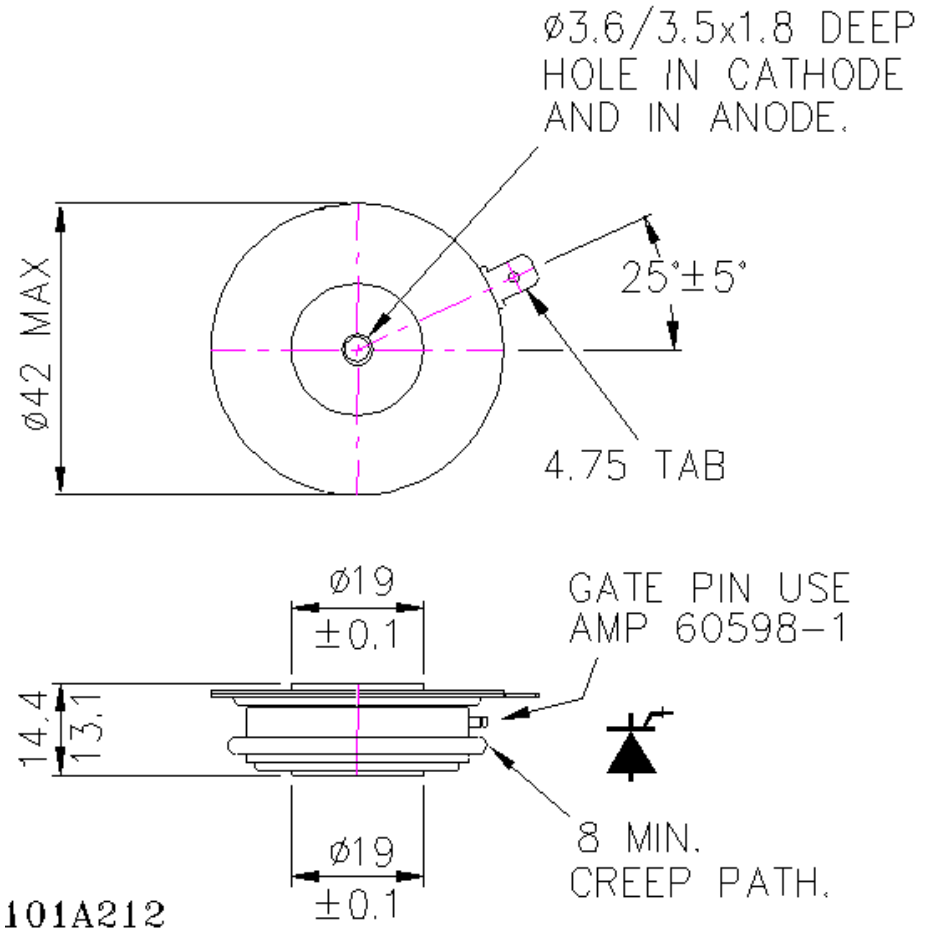

ORDERING INFORMATION (Please quote 10 digit code as below)

P0389	WC	♦ ♦	#
Fixed Type Code	Fixed Outline Code	Off-state Voltage Code V_{DRM}/100 04-08	t_q Code B=12µs, C=15µs

Typical order code: P0389WC04C – 400V V_{DRM}, 15µs t_q

IXYS Semiconductor GmbH
Edisonstraße 15
D-68623 Lampertheim
Tel: +49 6206 503-0
Fax: +49 6206 503-627
E-mail: marcom@ixys.de

IXYS UK Westcode Ltd
Langley Park Way, Langley Park,
Chippenham, Wiltshire, SN15 1GE.
Tel: +44 (0)1249 444524
Fax: +44 (0)1249 659448
E-mail: sales@ixysuk.com

IXYS Corporation
1590 Buckeye Drive
Milpitas CA 95035-7418
Tel: +1 (408) 457 9000
Fax: +1 (408) 496 0670
E-mail: sales@ixys.net

www.ixysuk.com

www.ixys.com

IXYS Long Beach
IXYS Long Beach, Inc
2500 Mira Mar Ave, Long Beach
CA 90815
Tel: +1 (562) 296 6584
Fax: +1 (562) 296 6585
E-mail: service@ixyslongbeach.com

The information contained herein is confidential and is protected by Copyright. The information may not be used or disclosed except with the written permission of and in the manner permitted by the proprietors IXYS UK Westcode Ltd.

© IXYS UK Westcode Ltd.

In the interest of product improvement, IXYS UK Westcode Ltd reserves the right to change specifications at any time without prior notice.

Devices with a suffix code (2-letter or letter/digit/letter combination) added to their generic code are not necessarily subject to the conditions and limits contained in this report.

IXYS
A Littelfuse Technology

Disclaimer Notice - Information furnished is believed to be accurate and reliable. However, users should independently evaluate the suitability of and test each product selected for their own applications. Littelfuse products are not designed for, and may not be used in, all applications. Read complete Disclaimer Notice at www.littelfuse.com/disclaimer-electronics.