SL1021A/B Series

Gas Discharge Tubes

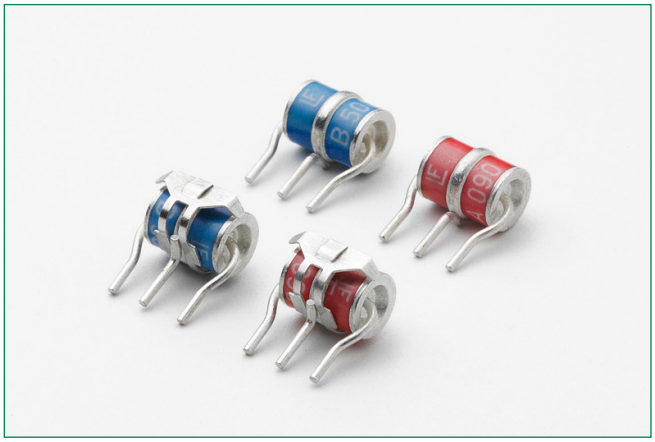

Additional Information

Resources SL1021A

Accessories SL1021A

Samples SL1021A

Resources SL1021B

Accessories SL1021B

Samples SL1021B

Agency Approvals

Agency	Agency File Number
	E128662

3 Electrode GDT Graphical Symbol

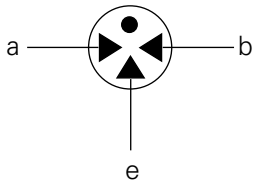

a = TIP
b = RING
e = GROUND
(center electrode)

Description

GDT circuit protection devices dissipate electrical surge energy safely within a contained plasma gas. Commonly used to help protect sensitive telecom and networking equipment and lines, GDTs protect from damage that may result from lightning strikes and equipment switching operations.

The Littelfuse GDT series described in this document are available in a variety of leaded and surface mount forms and offered with and without optional fail-safe clip. Please refer to the electrical specifications, dimension and packaging options section of this document for additional information.

SL1021A/B Series:

SL1021A/B series GDTs are designed to offer high levels of performance on fast rising transients in the range of 100V/µS to 1KV/µS, which are those most likely created by induced lightning disturbances.

These devices feature ultra low capacitance (typically 1.5pF or less) and are extremely robust with SL1021A devices able to divert a 10,000 Amp pulse without destruction, and SL1021B suffix devices able to divert a 20,000 Amp pulse without destruction.

These series offer optimized internal geometry which provide low insertion loss at high frequencies, ideal for the protection of broadband and other high speed transmission equipment.

Features

- RoHS compliant
- Low insertion loss
- Excellent response to fast rising transients
- Ultra low capacitance
- 10KA (A suffix devices) / 20KA (B suffix devices) surge capability tested with 8/20µs pulse as defined by IEC 61000-4-5
- Available with thermal failsafe option (add 'F' suffix to part number)

Applications

SL1021:

- Broadband equipment
- ADSL equipment
- XDSL equipment
- Satellite and CATV equipment
- Splitters
- General telecom equipment
- Telecom network interfaces
- Telephone line cards
- Repeaters
- Modems
- Line test equipment

© 2022 Littelfuse, Inc.
Specifications are subject to change without notice.
Revised: GD. 01/26/22

SL1021A/B Series

Gas Discharge Tubes

Product Characteristics

Materials	Dull Tin Plate 17.5 ± 12.5 Microns. with ceramic insulator
Product Marking	'LF' mark, voltage& date code: SL1021A **- Red**/White text SL1021B **- Blue**/White text
Glow to arc transition current	~ 1Amp
Glow Voltage	~60-200 Volts
Storage and Operation Temperature	-40 to +90°C
Transverse Voltage (Delay Time)	< 0.2µSec (Tested to ITU-T Rec. K.12)
Arc Voltage	~10 to 35 Volts
Holdover Voltage	<150mS (Tested to ITU-T Rec. K.12)

Electrical Characteristics

Device Specifications (at 25°C)								Life Ratings				
Part Number	**DC Voltage 100V/Sec.**			**DC Voltage 100 V/µSec.**	**DC Voltage 1kV/µSec.**	**Capacitance (@1Mhz)**	**Insulation Resistance**	**AC Current 50Hz 1Sec. x10[1]**	**Surge Current 8/20µSec x10[1]**	**Max Single Surge 8/20µSec[1]**	**Max Single Surge 10/350µSec[1]**	**Surge Life 10/1000 µSecx300[1]**
	MIN	**TYP**	**MAX**				**MIN**					
SL1021B075	60	75	90	500	650	<1.5pF	$>10^{10}$ Ω (at 50V)	10Amps	10kA[2] 20kA[3]	15kA[2] 25kA[3]	4kA[2] 5kA[3]	200Amps
SL1021A090 SL1021B090	72	90	108									
SL1021A145 SL1021B145	116	145	174		600		$>10^{10}$ Ω (at 100V)				2.5kA[2] 5kA[3]	
SL1021A150 SL1021B150	120	150	180									
SL1021A200	150	200	250									
SL1021A230 SL1021B230	184	230	276	450	650							
SL1021A250 SL1021B250	200	250	300	500								
SL1021A260 SL1021B260	210	260	310	550	700							
SL1021A300 SL1021B300	240	300	360	650	850							
SL1021A350 SL1021B350	280	350	420	700	900							
SL1021A400 SL1021B400	320	400	480	850	950							
SL1021A420 SL1021B420	345	420	500									
SL1021A450 SL1021B450	360	450	540	900	1000							
SL1021A500 SL1021B500	400	500	600	950	1100							
SL1021A600	480	600	720	1000	1200							

Notes:

1. Total current through centre electrode, tested in accordance with ITU-T Rec K.12
2. SL1021A series
3. SL1021B series

© 2022 Littelfuse, Inc.
Specifications are subject to change without notice.
Revised: GD. 01/26/22

SL1021A/B Series
Gas Discharge Tubes

Time vs. Current for Failsafe

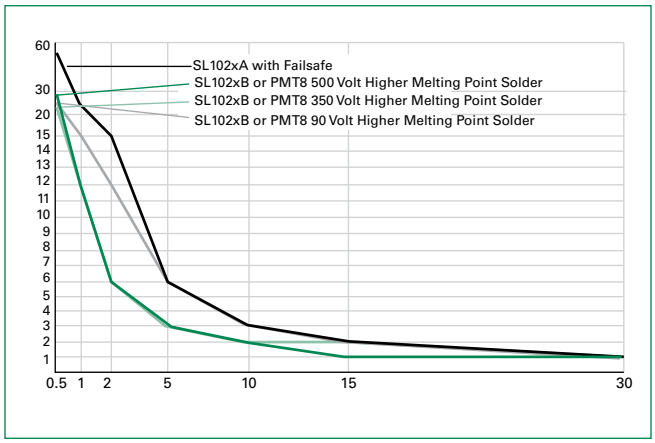

Voltage vs. Time Characteristic

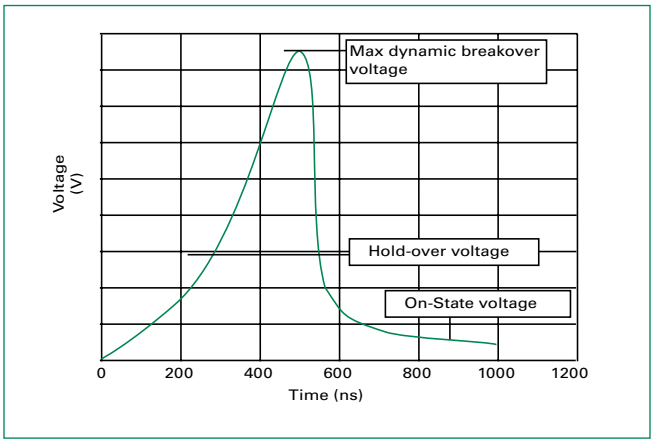

Soldering Parameters - Reflow Soldering (Surface Mount Devices)

Reflow Condition		Pb – Free assembly
Pre Heat	- Temperature Min ($T_{s(min)}$)	150°C
	- Temperature Max ($T_{s(max)}$)	200°C
	- Time (Min to Max) (t_s)	60 – 180 secs
Average ramp up rate (Liquidus Temp (T_L) to peak		3°C/second max
$T_{S(max)}$ to T_L - Ramp-up Rate		5°C/second max
Reflow	- Temperature (T_L) (Liquidus)	217°C
	- Temperature (t_L)	60 – 150 seconds
Peak Temperature (T_P)		$260^{+0/-5}$ °C
Time within 5°C of actual peak Temperature (t_p)		10 – 30 seconds
Ramp-down Rate		6°C/second max
Time 25°C to peak Temperature (T_P)		8 minutes Max.
Do not exceed		260°C

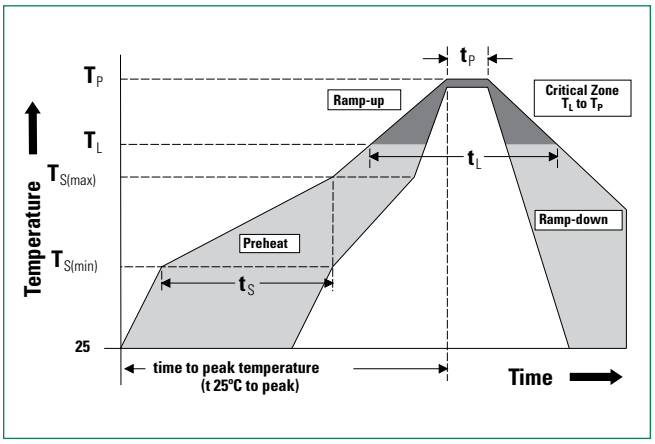

Soldering Parameters - Hand Soldering
Solder Iron Temperature: 350° C +/- 5°C
Heating Time: 5 seconds max.

Soldering Parameters - Wave Soldering (Thru-Hole Devices)

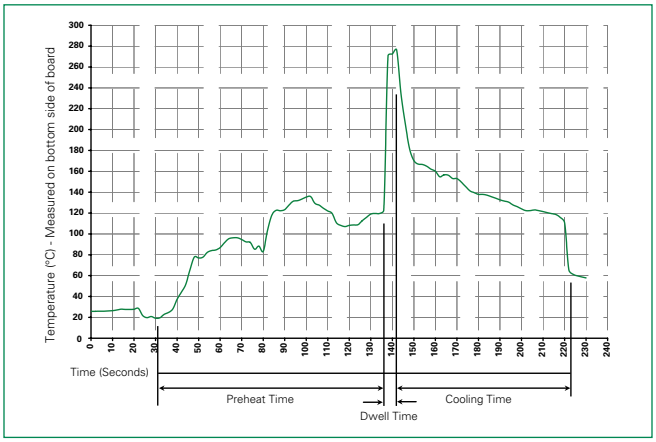

Recommended Process Parameters:

Wave Parameter	Lead-Free Recommendation
Preheat: (Depends on Flux Activation Temperature)	(Typical Industry Recommendation)
Temperature Minimum:	100° C
Temperature Maximum:	150° C
Preheat Time:	60-180 seconds
Solder Pot Temperature:	280° C Maximum
Solder Dwell Time:	2-5 seconds

Note: Surge Arrestors with a Failsafe mechanism should be individually examined after soldering

© 2022 Littelfuse, Inc.
Specifications are subject to change without notice.
Revised: GD. 01/26/22

SL1021A/B Series
Gas Discharge Tubes

Device Dimensions

Note: Failsafe option dimensions shown in green.

Shaped Radial Leaded Devices:

Type 04 / R

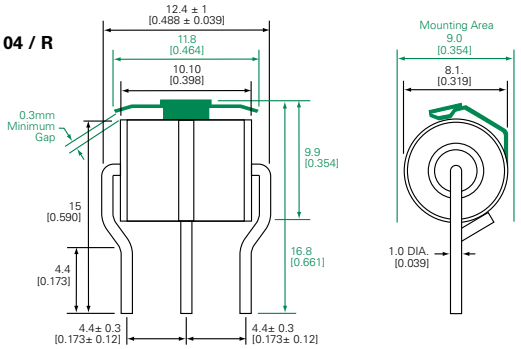

Type 05 / P

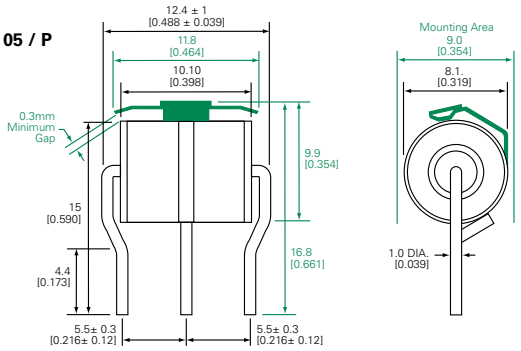

Core Devices:

Type 01 / C

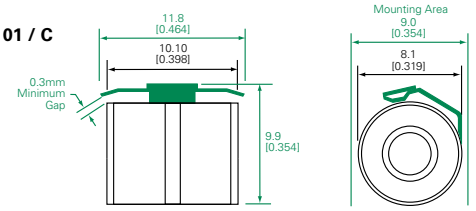

Straight Radial Leaded Devices:

Type 06 / Y

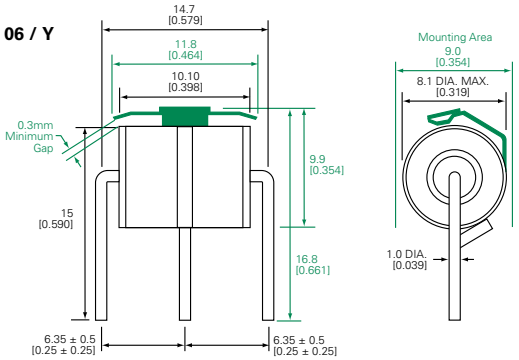

Straight "T" Leaded Devices:

Type 14 / X

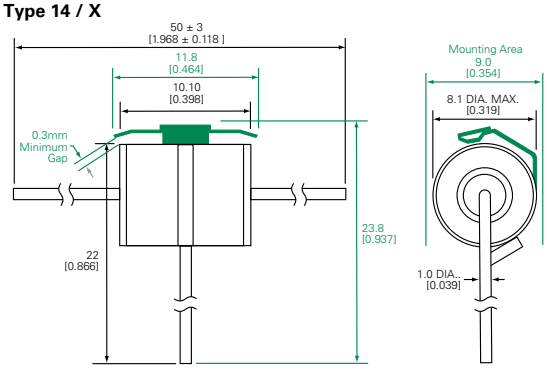

© 2022 Littelfuse, Inc.
Specifications are subject to change without notice.
Revised: GD. 01/26/22

SL1021A/B Series
Gas Discharge Tubes

Part Numbering System and Ordering Information

SL102x x xxx x x

Series
SL1021
SL1024

Surge Capability
A = 10kA
B = 20kA

Breakdown Voltage

090 = 90V	300 = 300V
145 = 145V	350 = 350V
150 = 150V	400 = 400V
200 = 200V	420 = 420V
230 = 230V	450 = 450V
250 = 250V	500 = 500V
260 = 260V	600 = 600V

Configuration Code
(See Device Dimensions section)

C	Y
R	X
P	

Option Code
Blank = No failsafe
F or G = With Failsafe

PMT8 xxx x x

Series
PMT8

Breakdown Voltage
090 = 90V
230 = 230V
250 = 250V
350 = 350V
400 = 400V

Configuration Code
(See Device Dimensions section)

01	10
04	14
05	60
06	

Option Code
Blank = No Failsafe
F = With Failsafe

Packaging

For 'SL1021A/B' device type C, R, P, Y packing

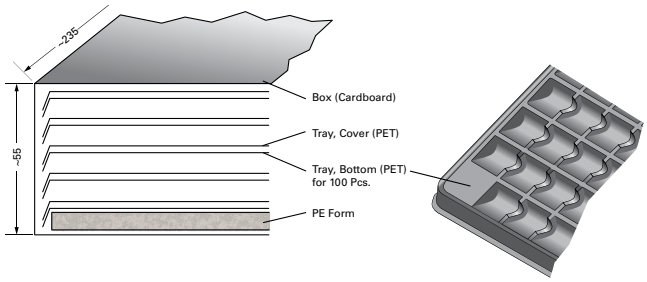

For 'SL1021A/B' device type X packing

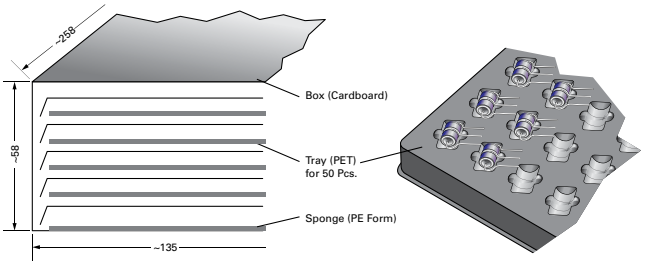

Device Type	Description	Quantity
Type C	100pcs/tray x 5 trays per carton	500
Type R	100pcs/tray x 5 trays per carton	500
Type P	100pcs/tray x 5 trays per carton	500
Type Y	100pcs/tray x 5 trays per carton	500
Type X	50pcs/tray x 5 trays per carton	250

* Please contact the factory for further packaging information.

Disclaimer Notice - Information furnished is believed to be accurate and reliable. However, users should independently evaluate the suitability of and test each product selected for their own applications. Littelfuse products are not designed for, and may not be used in, all applications. Read complete Disclaimer Notice at: www.littelfuse.com/disclaimer-electronics.

© 2022 Littelfuse, Inc.
Specifications are subject to change without notice.
Revised: GD. 01/26/22