Dc Disconnect Switch

LS7R0250

1500 V Dc • 250 A

Description

The Littelfuse LS7R dc series is an energy-efficient, compact disconnect switch that quickly breaks or resumes the flow of current safely to prevent shock hazards when trying to isolate circuits or repair systems. It is a 1500 V dc disconnect for ungrounded systems.

Features/Benefits

- The patented operation system minimizes damage caused by arcs upon disconnection to increase product reliability and longevity
- Streamline design eliminates the need for external bridging links (jumpers) to lower heat dissipation for increased energy efficiency, decreased installation and maintenance time, and reduced footprint for added design flexibility
- High-level disconnection insulation provides a barrier to stop conduction when switch is in off position for added safety
- The self-cleaning blade contacts eliminate performance degradation (from increased electrical resistance over time) to ensure consistent behavior across the product's lifespan
- The internally-located "sandwich-type" 2-contact symmetrical design mitigates the electromagnetic force of repulsion to offer enhanced functionality in short-circuit conditions
- Meets UL 94 flammability requirements with self-extinguishing/non-flammable materials to prevent fires

Applications

- Solar/PV systems: combiner boxes, recombiner boxes and inverters
- Energy storage systems: disconnection of batteries, containerized batteries
- Oil & gas: dc drives
- Railway: earthing switches and battery disconnection
- UPS: switching and isolation of batteries
- Electrical vehicle chargers

Specifications

UL 98B Standards	
Total Voltage Rating	1500 V dc
Amperage Rating	250 A
SCCR Rating	10 kA
Ambient Temperature	-20 to 50 °C (-4 to 122 °F)
IEC 60947-3 Standards	
Insulation Voltage Rating Ui	1500 V dc
Impulse Withstand Voltage Rating Uimp	12 kV
Operational Current DC21B Rating	250 A / 1500 V dc
Other Characteristics	
Power Losses at 250 A	8.26 watts
Maximum Busbar Connection Range	1 bar x 5 mm (.20") **H** x 32 mm (1.25") **L**
Number of Circuits/Switches	1
Tightening Torque	159 lbf-in (18 N•m)
Material	Plastic housing Silver-plated copper terminals
Base Mounting	Screws
Flammability Rating	UL 94 V-0
Approvals	UL 98B & UL 94 UL Guide WHVA UL Listed E511898 NEC Article 690 for PV systems IEC-60947-3 CE EAC
Environmental	RoHS compliant REACH
Country of Origin	Spain

Recommended Accessories

- **Panel Handle with Shaft LDSSA11**
  For closed panel door access
- **Direct Handle LDSSI11**
  For open panel door access
- **Auxiliary Contact LDMAU11**
  Remotely indicates switch position
- **Spacers LDMEL11**
  Increase distance between switch and mounting plate

© 2021 Littelfuse, Inc.

Dc Disconnect Switch

LS7R0250

Part Numbering System

Ordering Information

DC DISCONNECT SWITCH					
PART NUMBER	VOLTAGE	AMPERAGE	INSTALLATION	CONFIGURATION	SINGLE UNIT WEIGHT
LS7R02502PS00L	1500 V dc	250 A	Ungrounded	Type 2P	3 kg

Dimensions Millimeters (Inches)

Dc Disconnect Switch

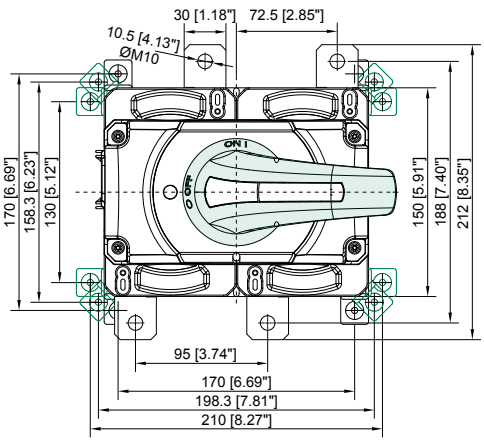

Switch - Side View

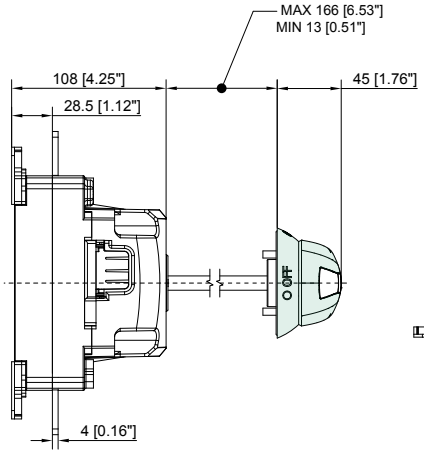

Panel Handle with Shaft

LDSSA11

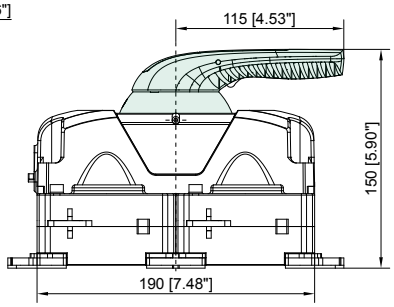

Switch - 3D Installation View

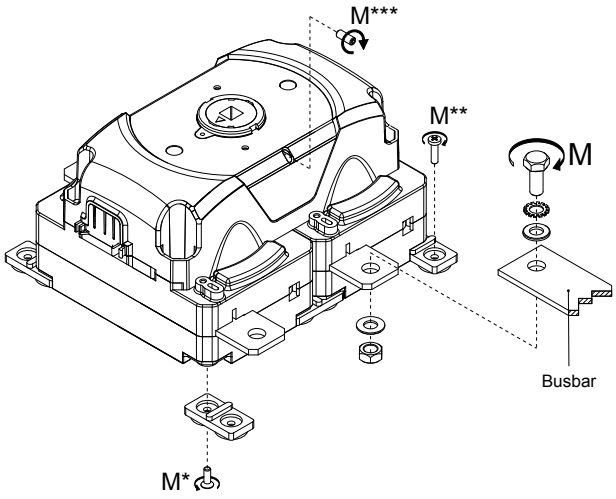

Busbar

QTY		COPPER BUSBAR M (TERMINAL TORQUE) (+5 % | -10 %)		COPPER BUSBAR H MAX (CU)		COPPER BUSBAR L MAX (CU)	
		N•M	LBF•INCH	MM	INCH	MM	INCH
1	M10	18	159	5	13/64	32	1 ¼

M			M (+5 % | -10 %)	
			N•M	LBF•INCH
*	T20	M4	1.2	10.6
**	—	M4	1.5	13.3
***	Allen	M5	1.5	13.3

MINIMUM BUSBAR SECTION ACCORDING TO UL 98B

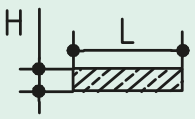

Disclaimer Notice – Information furnished is believed to be accurate and reliable. However, users should independently evaluate the suitability of and test each product selected for their own applications. Littelfuse products are not designed for, and may not be used in, all applications. Read complete Disclaimer Notice at **www.littelfuse.com/product-disclaimer.**

© 2021 Littelfuse, Inc.