IXYS UK WESTCODE

Date:- 28th August, 2012

Data Sheet Issue:- A2

Provisional Data

Phase Control Thyristor

Types N3790T#240 to N3790T#280

Development Type No.: NX223TJ280

Absolute Maximum Ratings

	VOLTAGE RATINGS	MAXIMUM LIMITS	UNITS
V_{DRM}	Repetitive peak off-state voltage, (note 1)	2400-2800	V
V_{DSM}	Non-repetitive peak off-state voltage, (note 1)	2400-2800	V
V_{RRM}	Repetitive peak reverse voltage, (note 1)	2400-2800	V
V_{RSM}	Non-repetitive peak reverse voltage, (note 1)	2500-2900	V

	OTHER RATINGS		MAXIMUM LIMITS	UNITS
$I_{T(AV)M}$	Maximum average on-state current, T_{sink}=55°C, (note 2)		3790	A
$I_{T(AV)M}$	Maximum average on-state current. T_{sink}=85°C, (note 2)		2655	A
$I_{T(AV)M}$	Maximum average on-state current. T_{sink}=85°C, (note 3)		1405	A
$I_{T(RMS)M}$	Nominal RMS on-state current, T_{sink}=25°C, (note 2)		7410	A
$I_{T(d.c.)}$	D.C. on-state current, T_{sink}=25°C, (note 4)		6610	A
I_{TSM}	Peak non-repetitive surge t_p=10ms, V_{rm}=60%V_{RRM}, (note 5)		49.5	kA
I_{TSM2}	Peak non-repetitive surge t_p=10ms, $V_{rm}\leq$10V, (note 5)		55.0	kA
I^2t	I^2t capacity for fusing t_p=10ms, V_{rm}=60%V_{RRM}, (note 5)		12.3×10^6	A^2s
I^2t	I^2t capacity for fusing t_p=10ms, $V_{rm}\leq$10V, (note 5)		15.1×10^6	A^2s
$(di/dt)_{cr}$	Critical rate of rise of on-state current (note 6)	(continuous, 50Hz)	100	A/µs
		(repetitive, 50Hz, 60s)	200	
		(non-repetitive)	400	
V_{RGM}	Peak reverse gate voltage		5	V
$P_{G(AV)}$	Mean forward gate power		5	W
P_{GM}	Peak forward gate power		40	W
$T_{j\ op}$	Operating temperature range		-40 to +125	°C
T_{stg}	Storage temperature range		-40 to +150	°C

Notes:-
1) De-rating factor of 0.13% per °C is applicable for T_j below 25°C.
2) Double side cooled, single phase; 50Hz, 180° half-sinewave.
3) Cathode side cooled, single phase; 50Hz, 180° half-sinewave.
4) Double side cooled.
5) Half-sinewave, 125°C T_j initial.
6) V_D=67% V_{DRM}, I_{TM}=2000A, I_{FG}=2A, $t_r\leq$0.5µs, T_{case}=125°C.

Characteristics

	PARAMETER	MIN.	TYP.	MAX.	TEST CONDITIONS (Note 1)	UNITS
V_{TM}	Maximum peak on-state voltage	-	-	1.50	I_{TM}=4000A	V
V_{TM}	Maximum peak on-state voltage	-	-	2.10	I_{TM}=8000A	V
V_{T0}	Threshold voltage	-	-	0.90		V
r_T	Slope resistance	-	-	0.15		mΩ
$(dv/dt)_{cr}$	Critical rate of rise of off-state voltage	1000	-	-	V_D=80% V_{DRM}, linear ramp, gate o/c	V/µs
I_{DRM}	Peak off-state current	-	-	250	Rated V_{DRM}	mA
I_{RRM}	Peak reverse current	-	-	250	Rated V_{RRM}	mA
V_{GT}	Gate trigger voltage	-	-	3.0	T_j=25°C V_D=10V, I_T=3A	V
I_{GT}	Gate trigger current	-	-	300		mA
V_{GD}	Gate non-trigger voltage	-	-	0.25	Rated V_{DRM}	V
I_H	Holding current	-	-	1000	T_j=25°C	mA
t_{gd}	Gate-controlled turn-on delay time	-	0.7	1.5	V_D=67% V_{DRM}, I_T=2000A, di/dt=10A/µs, I_{FG}=2A, t_r=0.5µs, T_j=25°C	µs
t_{gt}	Turn-on time	-	2.0	4.0		µs
Q_{rr}	Recovered charge	-	7000	7700	I_{TM}=4000A, t_p=2000µs, di/dt=10A/µs, V_r=100V	µC
Q_{ra}	Recovered charge, 50% Chord	-	4500	-		µC
I_{rr}	Reverse recovery current	-	210	-		A
t_{rr}	Reverse recovery time	-	43	-		µs
t_q	Turn-off time	-	250	-	I_{TM}=4000A, t_p=2000µs, di/dt=10A/µs, V_r=100V, V_{dr}=80%V_{DRM}, dV_{dr}/dt=20V/µs	µs
		-	400	-	I_{TM}=4000A, t_p=2000µs, di/dt=10A/µs, V_r=100V, V_{dr}=80%V_{DRM}, dV_{dr}/dt=200V/µs	
R_{thJK}	Thermal resistance, junction to heatsink	-	-	0.008	Double side cooled	K/W
		-	-	0.013	Anode side cooled	K/W
		-	-	0.020	Cathode side cooled	K/W
F	Mounting force	60	-	70	Note 2.	kN
W_t	Weight	-	1.15	-		kg

Notes:-
1) Unless otherwise indicated T_j=125°C.
2) For other clamp forces, please consult factory.

Curves

Figure 1 – On-state characteristics of Limit device

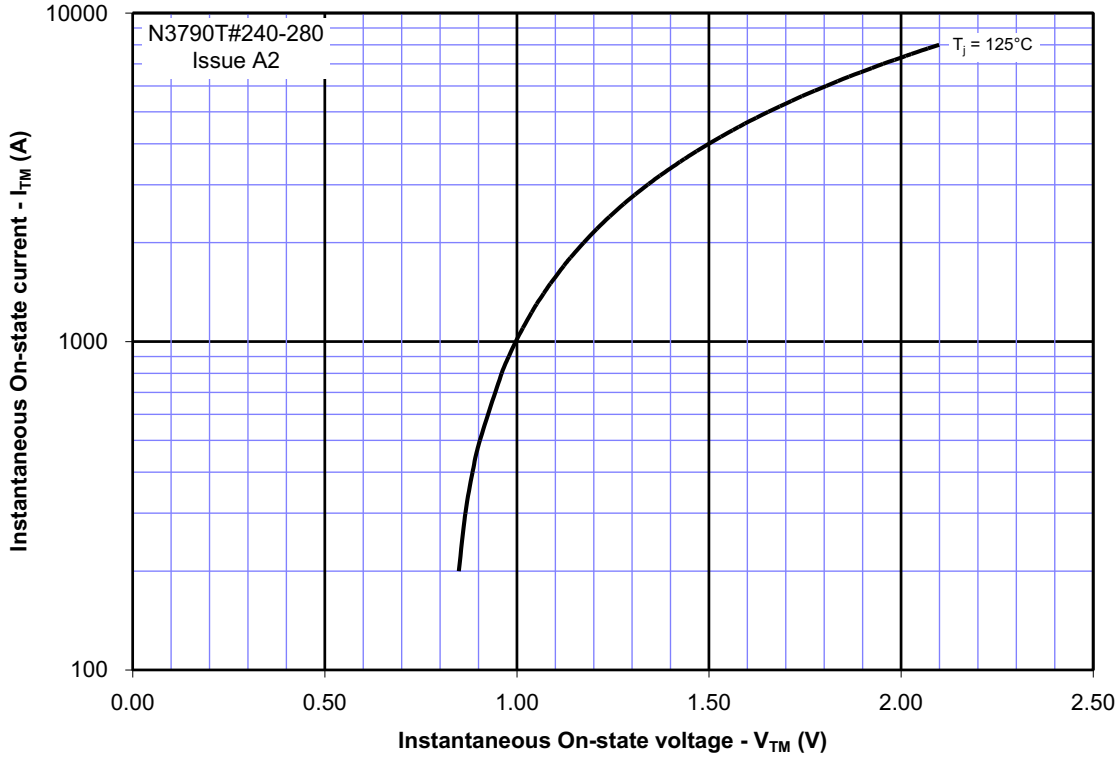

Figure 2 – Transient thermal impedance

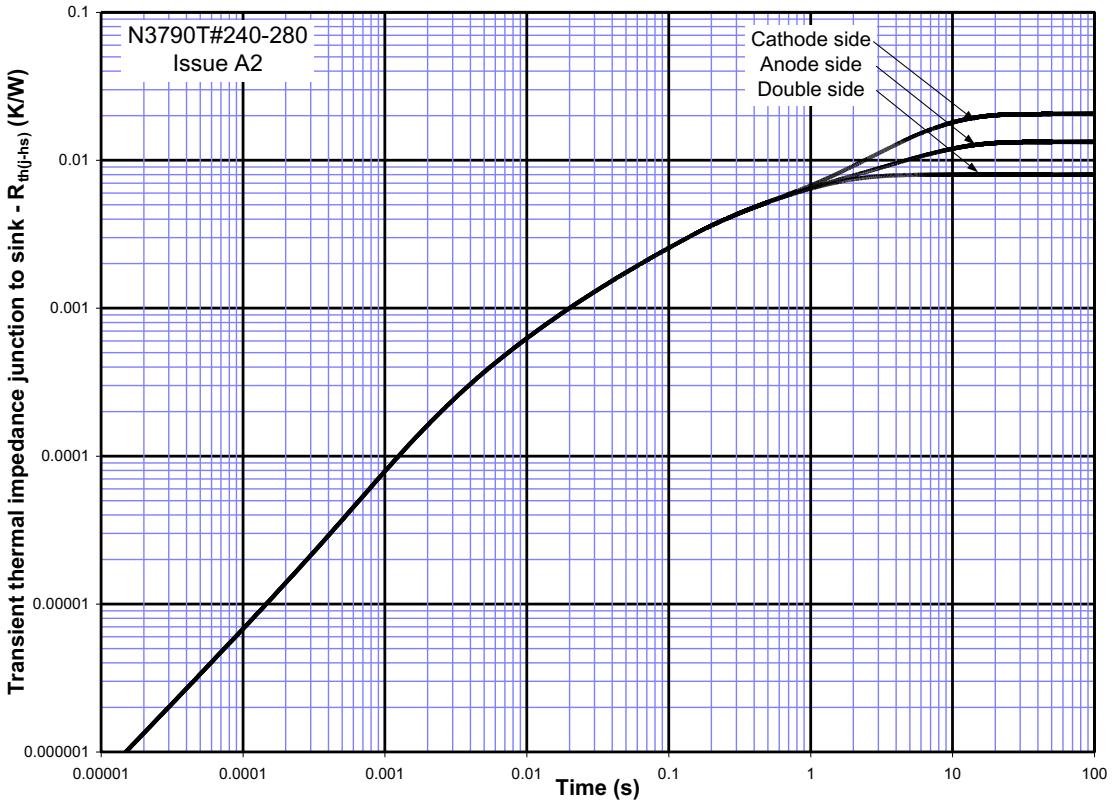

Figure 3 – Maximum surge and I^2t Ratings

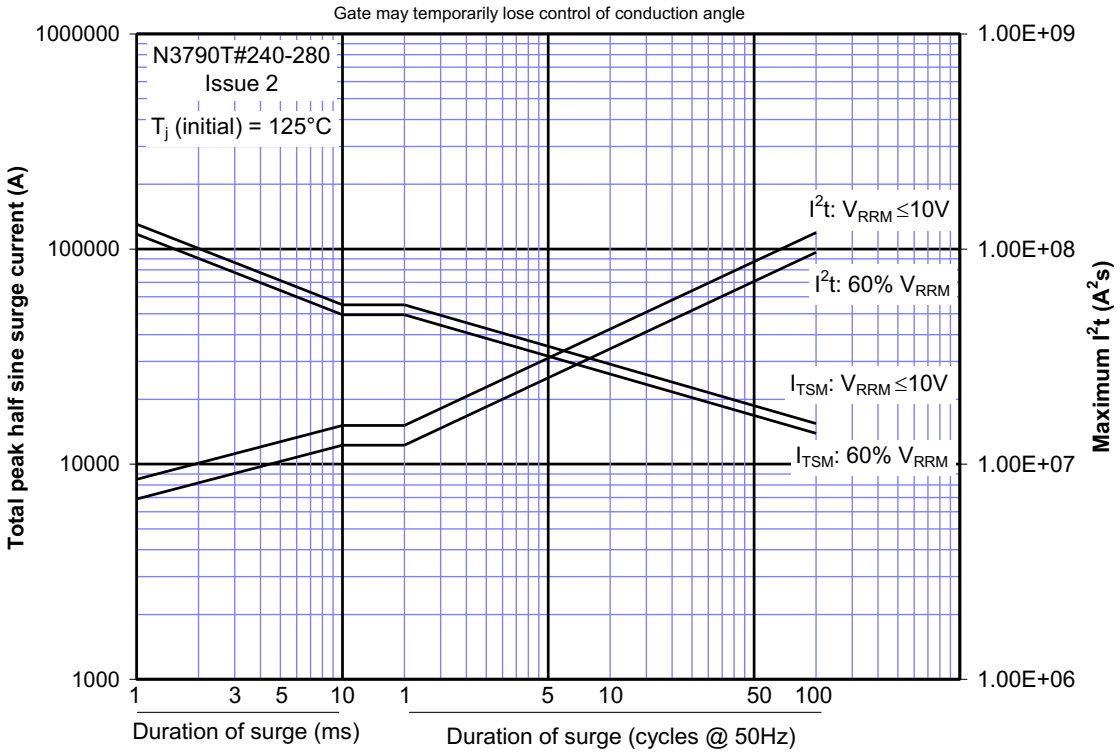

Outline Drawing & Ordering Information

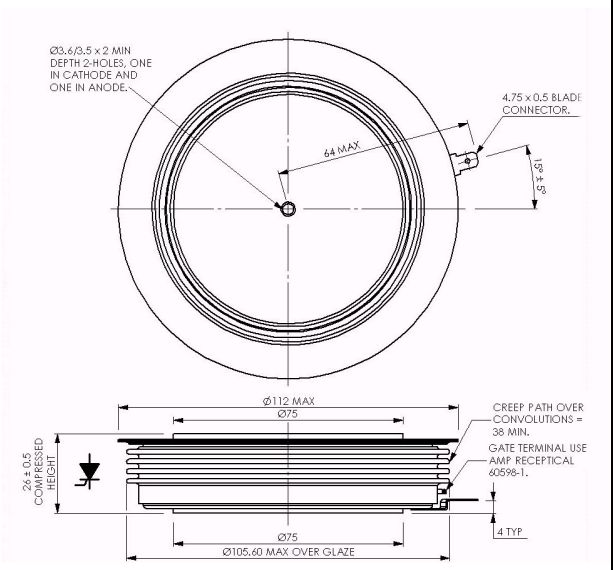

101A373

Outline option TJ

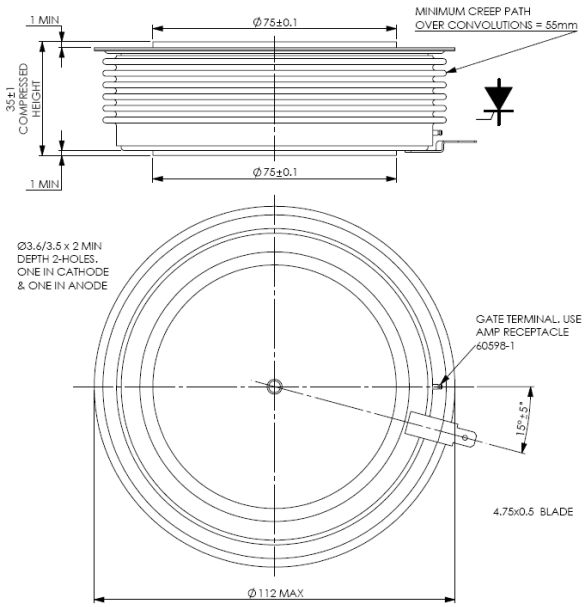

101A395

Outline option TE

ORDERING INFORMATION (Please quote 10 digit code as below)

N3790	T#	♦♦	0
Fixed Type Code	Fixed TJ = 26mm clamp height TE = 35mm clamp height	Voltage code V_{DRM}/100 24-28	Fixed turn-off time code

Order code: N3790TJ280 – 2800V V_{DRM}, V_{RRM}, 26mm clamp height capsule.

IXYS Semiconductor GmbH
Edisonstraße 15
D-68623 Lampertheim
Tel: +49 6206 503-0
Fax: +49 6206 503-627
E-mail: marcom@ixys.de

IXYS UK Westcode Ltd
Langley Park Way, Langley Park,
Chippenham, Wiltshire, SN15 1GE.
Tel: +44 (0)1249 444524
Fax: +44 (0)1249 659448
E-mail: sales@ixysuk.com

IXYS Corporation
1590 Buckeye Drive
Milpitas CA 95035-7418
Tel: +1 (408) 457 9000
Fax: +1 (408) 496 0670
E-mail: sales@ixys.net

www.ixysuk.com

www.ixys.com

IXYS Long Beach
IXYS Long Beach, Inc
2500 Mira Mar Ave, Long Beach
CA 90815
Tel: +1 (562) 296 6584
Fax: +1 (562) 296 6585
E-mail: service@ixyslongbeach.com

The information contained herein is confidential and is protected by Copyright. The information may not be used or disclosed except with the written permission of and in the manner permitted by the proprietors IXYS UK Westcode Ltd.

© IXYS UK Westcode Ltd.

In the interest of product improvement, IXYS UK Westcode Ltd reserves the right to change specifications at any time without prior notice.

Devices with a suffix code (2-letter, 3-letter or letter/digit/letter combination) added to their generic code are not necessarily subject to the conditions and limits contained in this report.

IXYS
A Littelfuse Technology

Disclaimer Notice - Information furnished is believed to be accurate and reliable. However, users should independently evaluate the suitability of and test each product selected for their own applications. Littelfuse products are not designed for, and may not be used in, all applications. Read complete Disclaimer Notice at www.littelfuse.com/disclaimer-electronics.