Littelfuse®
Expertise Applied | Answers Delivered

UP-LINK™ REMOTE INDICATION FUSE HOLDER

600 V

Description

The Littelfuse Up-LINK remote indicating fuse holder can be easily integrated with a PLC to offer remote notification when a fuse has opened. Accompanied with local LED indication, this reduces downtime by allowing instant communication and helping plant and maintenance personnel to quickly fix the problem.

Features/Benefits

- Cost effective solution for remote blown-fuse indication
- Easily integrates with an existing PLC or system
- Utilizes reliable solid state circuitry
- Meets stringent IEC and UL Touch-Safe Standards to improve worker safety

Web Resources

Training videos, downloadable CAD drawings, industry downtime reports and other technical information:
www.littelfuse.com/up-link

Recommended Fuses

Class CC and Midget-Style (10 x 38 mm)

Dimensions mm (inches)

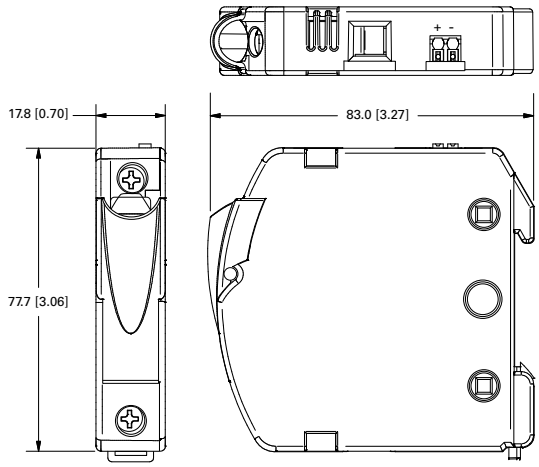

Specifications

Voltage Rating	AC: 100 – 600 V DC: 140 – 600 V
Amperage	30 A max
SCCR	200 kA AC (Class CC) 20 kA DC 100 kA (KLK Midget)
Terminal Type	Pressure Plate
Terminal Torque	17.7 in-lbs
Wire Range	#8–#14 CU Stranded #10–#14 CU Solid
Flammability Rating	UL94 V-0
Approvals	Class CC: UL Listed (File: E14721) Midget: UL Recognized (File: E14721) CSA Certified (File: LR 7316)

Remote Indicating Circuit

Output (open fuse)	Open Collector
Max Current Sink	25 mA (28 VDC Max)
Terminals	Push In
Wire Range	#16–#24 CU Solid/Stranded
Suggested Insulation Strip Length	8 mm (0.31 in)

Ordering Information

POLES	PART NUMBER	ORDERING NUMBER
CLASS CC		
1	LINK001C	LINK001C.Z
2	LINK002C	LINK002C.Z
3	LINK003C	LINK003C.Z
MIDGET 10 X 38 mm		
1	LINK001M	LINK001M.Z
2	LINK002M	LINK002M.Z
3	LINK003M	LINK003M.Z

Quick-Link Daisy Chain Connector

Littelfuse Quick-LINK daisy chain connectors provide optimal utilization of multiple Up-LINK remote indicating fuse holders when integrated with a PLC. These products are used to daisy chain multiple Up-LINK units together and reduce the number of PLC I/O ports required.

Ordering Information

POLES	TYPE	ORDERING NUMBER
3	Base	QLINK3B.Z
9	Extender	QLINK9E.Z

© 2013 Littelfuse POWR-GARD® Products