MISM-7

7mm Surface Mount Reed Switch

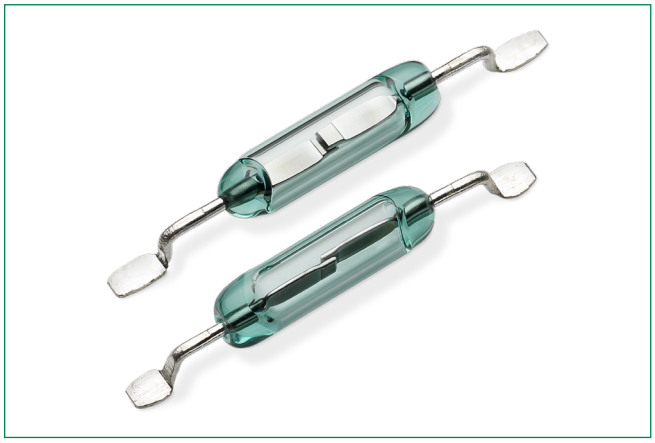

Description

The MISM-7 surface mount reed switch is a sub-miniature, normally open switch with a 7mm long x 1.8mm diameter (0.276" x 0.071") glass envelope, capable of switching up to 0.25 Amps.

This reed switch is a surface mount version of the MITI-7. It has a high insulation resistance of 1012 Ohms minimum and a contact resistance of less than 150 milliohms.

Features & Benefits

- Ultra-miniature surface mount normally open switch
- Available sensitivity range 6-10 AT
- Capable of switching 170 Vdc or 0.25A up to 10W
- Hermetically sealed switch contacts are not effected by and have no effect on their external environment
- Zero operating power required for contact closure
- Excellent for switching microcontroller logic level loads
- Very low space requirement

Applications

- Position Sensing
- Level Sensing
- Meter Equipment
- Security
- Office Equipment

Additional Information

Resources | Accessories | Samples

Agency Approvals

Agency	Agency File Number	Ampere-Turns Range
c UL us	E47258 E471070	6 - 20AT

Note: Contact Littelfuse for specific agency approval ratings.

Switch Type

Contact Form	A (SPST-NO)
Materials	Body: Glass Leads: Tin-plated Ni-Fe wire

Note: SPST-NO = Single-pole, single-throw, normally open

Electrical Ratings

Contact Rating [1]		W/VA - max.	10
Voltage [3]	Switching [2] Breakdown [4]	Vdc - max. Vac - max. Vdc - min.	170 120 175
Current [3]	Switching [2] Carry	Adc - max. Aac - max. Adc - max.	0.25 0.18 0.50
Resistance	Contact, Initial Insulation	Ω - max. Ω - min.	0.150 10^{12}
Capacitance	Contact	pF - typ.	0.3
Temperature	Operating Storage [5]	°C °C	-40 to +125 -65 to +125

Notes:
1. Contact rating - Product of the switching voltage and current should never exceed the wattage rating. Contact Littelfuse for additional load/life information.
2. When switching inductive and/or capacitive loads, the effects of transient voltages and/or currents should be considered. Refer to Application Notes AN108A and AN107 for details.
3. Electrical Load Life Expectancy - Contact Littelfuse with voltage, current values along with type of load.
4. Breakdown Voltage - per MIL-STD-202, Method 301.
5. Storage Temperature - Long time exposure at elevated temperature may degrade solderability of the leads.

© 2021 Littelfuse, Inc.
Specifications are subject to change without notice.
Revised: GD.07/12/21

MISM-7

7mm Surface Mount Reed Switch

Product Characteristics

Operating Characteristics		
Operate Time [1]	-	0.45ms - max.
Release Time [1]	-	0.20ms - max.
Shock [2]	11ms 1⁄2 sine wave	100G - max
Vibration [2]	50-2000 Hertz	30G - max.
Resonant Frequency	-	14kHz - typ.

Magnetic Characteristics		
Pull-In Range [3]	Ampere Turns	6-10, 10-15, 15-20
Rating Sensitivity [4]	Ampere Turns	10
Test Coil	-	L4991

Notes:
1. Operate (including bounce)/Release Time - per EIA/NARM RS-421-A, diode suppressed coil (Coil I).
2. Shock and Vibration - per EIA/NARM RS-421-A and MIL-STD-202.
3. Pull-In Range - Contact Littelfuse for narrower AT ranges available. These AT values are the before modification AT of the MITI-3V1.
4. Rating Sensitivity - The value at which contact ratings and operating characteristics are determined. Derating may be required below this value.

Drop-Out vs. Pull In Chart

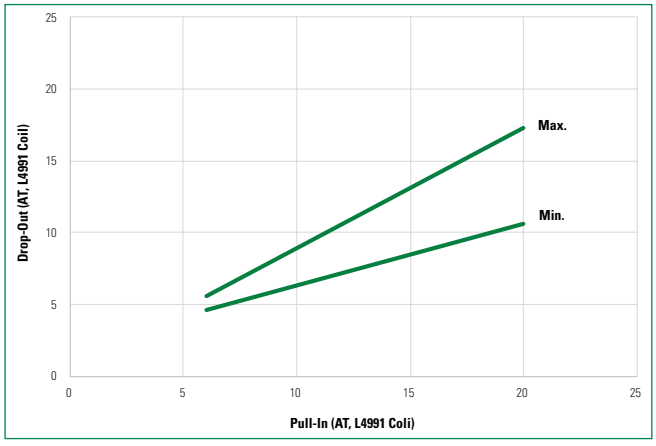

Note: Chart represents the range of Drop-Out, min to max for a given Pull-In value.

Part Numbering System

MISM-7 R _ - 6-10

Series

Packaging
R = Tape and Reel
B = Bulk

Form
Blank = 13.72mm
5 = 12.60mm

AT Range
6-10 AT
10-15 AT
15-20 AT

Example: 6-10 AT product is MISM-7R-6-10

Note: These AT values are the before-modification values of the bare reed switch.

Packaging

Packaging Option	Packaging Specification	Quantity	Quantity and Packaging Code	Taping Width
Tape and Reel	EIA-RS-481-1	3000	R	32mm

© 2021 Littelfuse, Inc.
Specifications are subject to change without notice.
Revised: GD.07/12/21

MISM-7

7mm Surface Mount Reed Switch

Dimensions

Dimensions in mm

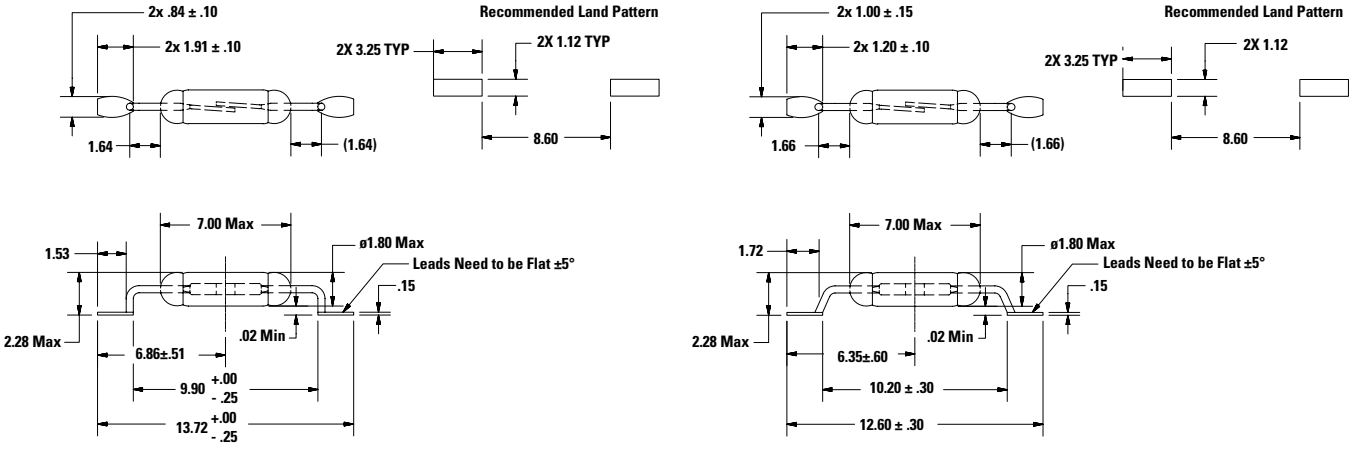

Note: Land pattern is Littelfuse recommendation only.
User is responsible for proper PCB design.
Reed orientation is configurable.

Tape Dimensions mm (inch)

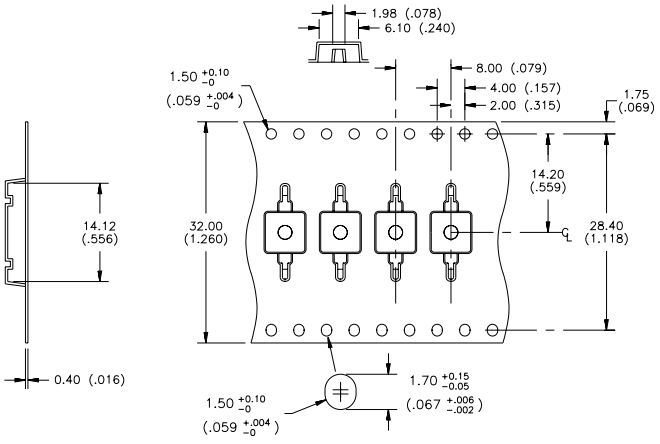

Reel Dimensions mm (inch)

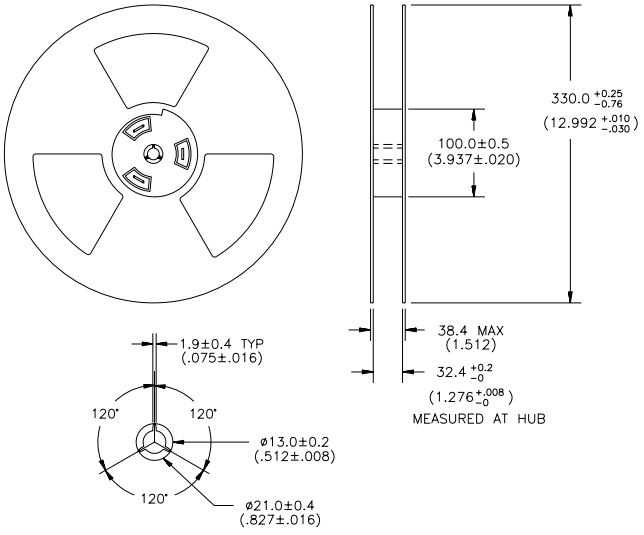

Disclaimer Notice - Information furnished is believed to be accurate and reliable. However, users should independently evaluate the suitability of and test each product selected for their own applications. Littelfuse products are not designed for, and may not be used in, all applications. Read complete Disclaimer Notice at www.littelfuse.com/disclaimer-electronics.

© 2021 Littelfuse, Inc.
Specifications are subject to change without notice.
Revised: GD.07/12/21