SP1555 Series 120A for V_{BUS}

RoHS Pb GREEN

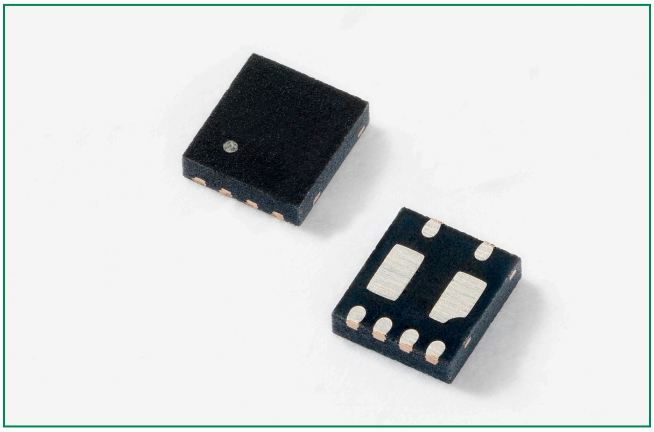

Description

The SP1555 integrates a 15V TVS diode to provide lightning surge protection for the USB V_{BUS} pin up to 120A (t_P=8/20µs) per the IEC61000-4-5 2nd edition standard. The SP1555 provides superior protection for current intensive applications such as fast charging peripherals.

The SP1555 comes in a space saving 2.0x1.8mm µDFN package with a typical height of 0.55mm making it an ideal solution for smart phones, tablets, and other portable electronics.

Pinout

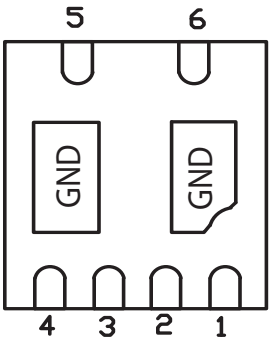

Bottom View

Features

- ESD, IEC 61000-4-2, ±30kV contact, ±30kV air
- EFT, IEC 61000-4-4, 80A (t_P=5/50ns)
- Surge, IEC 61000-4-5 2nd edition, 120A (t_P=8/20µs)
- Protection for V_{BUS} operating up to 15V
- Benchmark setting protection
- High current handling capability for fast charging applications
- Moisture Sensitivity Level (MSL-1)
- Lead-free and RoHS compliant

Functional Block Diagram

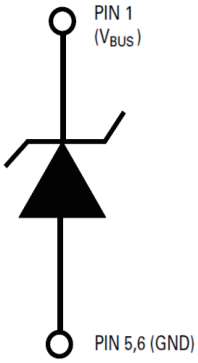

Applications

- Protection for the V_{BUS} circuit on USB2.0 Fast Charging

Life Support Note:

Not Intended for Use in Life Support or Life Saving Applications

The products shown herein are not designed for use in life sustaining or life saving applications unless otherwise expressly indicated.

©2016 Littelfuse, Inc.
Specifications are subject to change without notice.

Revision: 09/30/16

Absolute Maximum Ratings

Symbol	Parameter	Value	Units
I_{PP} (Pin 1)	Peak Current (t_p=8/20µs)	120	A
T_{OP}	Operating Temperature	-40 to 125	°C
T_{STOR}	Storage Temperature	-55 to 150	°C

CAUTION: Stresses at or above those listed in "Absolute Maximum Ratings" may cause permanent damage to the device. This is a stress only rating and operation of the device at these or any other conditions above those indicated in the operational sections of this specification is not implied. Also due to variations in test equipment stresses shown above are averages.

Electrical Characteristics (T_{OP}=25°C)

Parameter	Symbol	Test Conditions	Min	Typ	Max	Units
USB V_{BUS} (Pin 1)						
Reverse Standoff Voltage	V_{RWM}	Pin 1 to GND			15	V
Reverse Breakdown Voltage	V_{BR}	I_T=1mA, Pin 1 to GND	17.5	18.8	20.1	V
Reverse Leakage Current	I_{LEAK}	V_R=15V, Pin 1 to GND		0.05	1	µA
Forward Voltage	V_F	I_F=10mA, GND to Pin 1	0.6	0.7	1.0	V
Clamp Voltage[1]	V_C	I_{PP}=30A, t_p=8/20µs, Fwd		21.5		V
		I_{PP}=100A, t_p=8/20µs, Fwd		27.5		V
		I_{PP}=120A, t_p=8/20µs, Fwd		29.5		V
ESD Withstand Voltage[1]	V_{ESD}	IEC 61000-4-2 (Contact)	±30			kV
		IEC 61000-4-2 (Air)	±30			kV
Diode Capacitance[1]	C_D	Reverse Bias=0V, f=1MHz		800		pF

Note: 1 Parameter is guaranteed by design and/or device characterization.

Capacitance vs. Reverse Bias (Pin1 to GND)

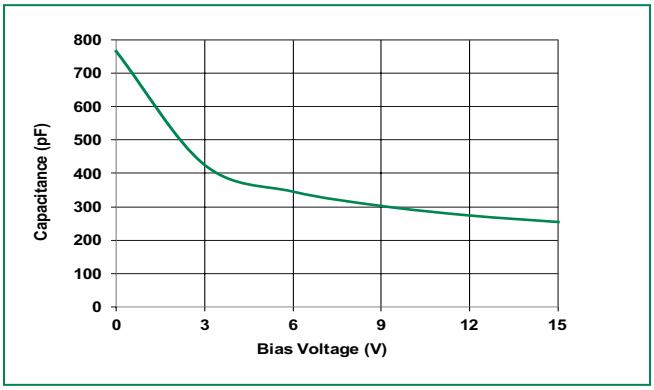

Clamping Voltage vs I_{PP}

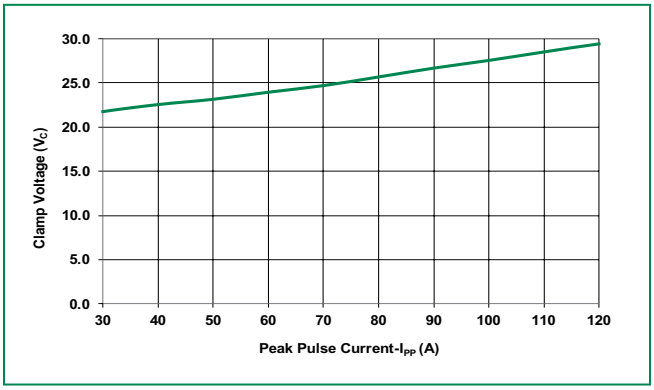

Non-Repetitive Peak Pulse Power vs. Pulse Duration (Pin1 to GND)

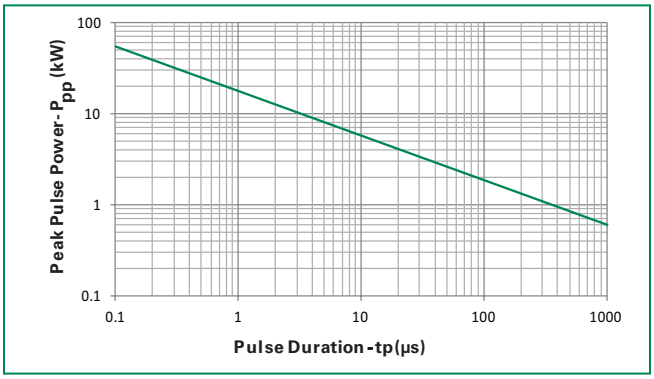

©2016 Littelfuse, Inc.
Specifications are subject to change without notice.

Soldering Parameters

Reflow Condition		Pb – Free assembly
Pre Heat	- Temperature Min ($T_{s(min)}$)	150°C
	- Temperature Max ($T_{s(max)}$)	200°C
	- Time (min to max) (t_s)	60 – 180 secs
Average ramp up rate (Liquidus) Temp (T_L) to peak		3°C/second max
$T_{S(max)}$ to T_L - Ramp-up Rate		3°C/second max
Reflow	- Temperature (T_L) (Liquidus)	217°C
	- Temperature (t_L)	60 – 150 seconds
Peak Temperature (T_P)		$260^{+0/-5}$ °C
Time within 5°C of actual peak Temperature (t_p)		20 – 40 seconds
Ramp-down Rate		6°C/second max
Time 25°C to peak Temperature (T_P)		8 minutes Max.
Do not exceed		260°C

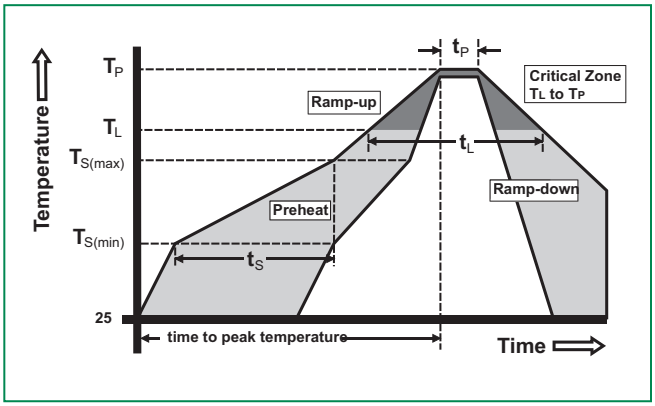

Product Characteristics

Lead Plating	Pre-Plated Frame
Lead Material	Copper Alloy
Lead Coplanarity	0.004 inches(0.102mm)
Substrate material	Silicon
Body Material	Molded Epoxy
Flammability	UL 94 V-0

Notes :
1. All dimensions are in millimeters
2. Dimensions include solder plating.
3. Dimensions are exclusive of mold flash & metal burr.
4. Blo is facing up for mold and facing down for trim/form, i.e. reverse trim/form.
5. Package surface matte finish VDI 11-13.

Part Numbering System

SP 1555 - 01 U T G

- SP: TVS Diode Arrays (SPA® Diodes)
- 1555: Series
- 01: Number of Channels
- U: Package U=µDFN-6
- T: T= Tape & Reel
- G: G= Green

Part Marking System

Ⓟ H 1

- Ⓟ: Product Series Ⓟ = SP1555
- H: Assembly Site
- 1: Number of Channels

Ordering Information

Part Number	Package	Min. Order Qty.	Packaging Option	P0/P1	Packaging Specification
SP1555-01UTG	µDFN-6	3000	Tape & Reel – 8mm tape/7" reel	4mm/4mm	EIA RS-481

©2016 Littelfuse, Inc.
Specifications are subject to change without notice.

Package Dimensions — µDFN-6 (1.8x2.0x0.55mm)

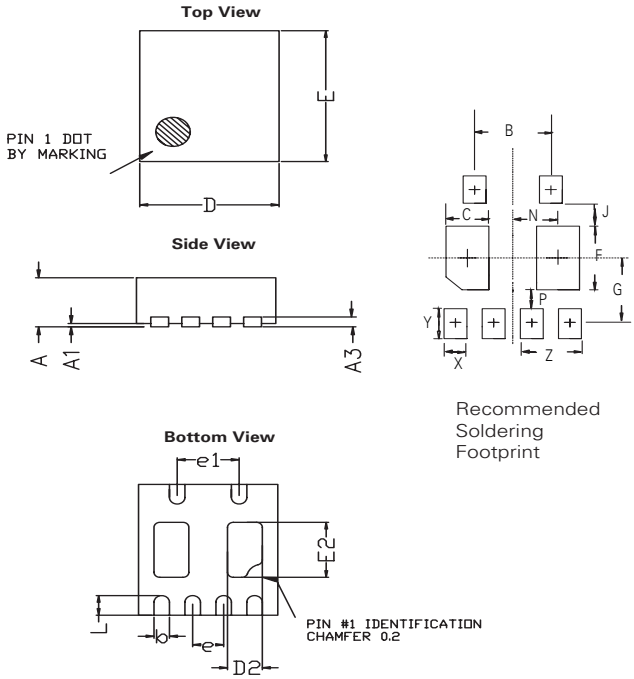

Symbol	JEDEC MO-229					
	Millimeters			Inches		
	Min	Nom	Max	Min	Nom	Max
A	0.50	0.55	0.60	0.020	0.022	0.024
A1	0.00	-	0.05	0.000	-	0.002
A3	0.15 Ref			0.006 Ref		
D	1.75	1.80	1.85	0.069	0.071	0.073
E	1.95	2.00	2.05	0.077	0.079	0.081
b	0.15	0.20	0.25	0.006	0.008	0.010
L	0.20	0.30	0.40	0.008	0.012	0.016
D2	0.35	0.45	0.55	0.014	0.018	0.022
E2	0.74	0.84	0.94	0.029	0.033	0.037
e	0.40 BSC			0.016 BSC		
e1	0.80 BSC			0.031 BSC		
B	0.80 BSC			0.031 BSC		
C	0.35	0.45	0.55	0.014	0.018	0.022
F	0.81	0.84	0.87	0.032	0.033	0.034
G	0.82	0.85	0.88	0.032	0.033	0.034
J	0.24	0.25	0.26	0.010	0.010	0.010
N	0.47	0.48	0.49	0.018	0.019	0.020
P	0.24	0.25	0.26	0.010	0.010	0.010
X	0.23	0.24	0.25	0.009	0.009	0.009
Y	0.35	0.36	0.37	0.014	0.014	0.014
Z	0.62	0.64	0.66	0.024	0.025	0.026

Notes:

1. Dimension and tolerancing comform to ASME Y14.5M-1994.
2. Controlling dimensions: Millimeter. Converted Inch dimensions are not necessarily exact.

Embossed Carrier Tape & Reel Specification — µDFN-6

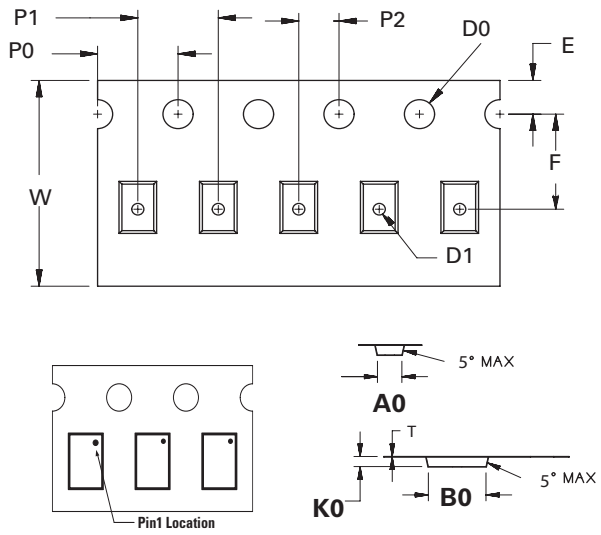

Symbol	Millimeters
A0	1.95 +/- 0.05
B0	2.30 +/- 0.05
D0	1.50 + 0.10
D1	Ø 0.60 + 0.05
E	1.75 +/- 0.10
F	3.50 +/- 0.05
K0	0.75 +/- 0.05
P0	4.00 +/- 0.10
P1	4.00 +/- 0.10
P2	2.00+/-0.05
T	0.25 +/- 0.02
W	8.00 + 0.30 /- 0.10

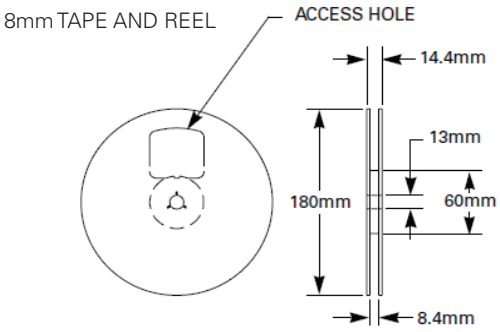

©2016 Littelfuse, Inc.
Specifications are subject to change without notice.