preliminary

Standard Rectifier Module

3~ Rectifier	Brake Chopper
V_{RRM} = 2200 V	V_{CES} = 1200 V
I_{DAV} = 210 A	I_{C25} = 120 A
I_{FSM} = 1000 A	$V_{CE(sat)}$ = 1,9 V

3~ Rectifier Bridge + Brake Unit + NTC

Part number

MDMA210UB1600PTED

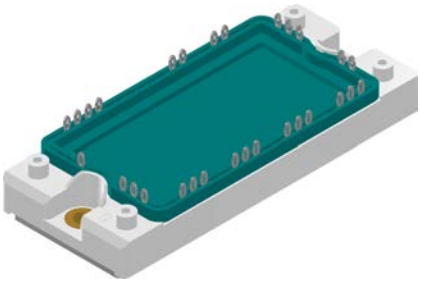

Backside: isolated

E72873

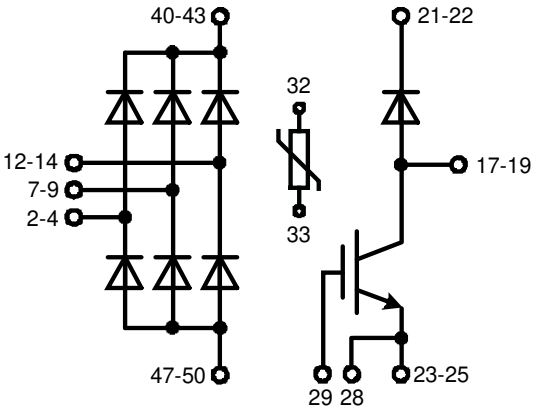

Features / Advantages:

- Package with DCB ceramic
- Improved temperature and power cycling
- Planar passivated chips
- Very low forward voltage drop
- Very low leakage current
- NTC

Applications:

- 3~ Rectifier with brake unit for drive inverters

Package: E2-Pack

- Isolation Voltage: 4300 V~
- Industry standard outline
- RoHS compliant
- PressFit-Pins for PCB mounting
- Height: 17 mm
- Base plate: Copper internally DCB isolated
- Advanced power cycling
- Phase Change Material available

Disclaimer Notice

Information furnished is believed to be accurate and reliable. However, users should independently evaluate the suitability of and test each product selected for their own applications. Littelfuse products are not designed for, and may not be used in, all applications. Read complete Disclaimer Notice at www.littelfuse.com/disclaimer-electronics.

© 2019 IXYS all rights reserved

Rectifier

Symbol	Definition	Conditions		Ratings min.	typ.	max.	Unit
V_{RSM}	*max. non-repetitive reverse blocking voltage*		T_{VJ} = 25°C			2300	V
V_{RRM}	*max. repetitive reverse blocking voltage*		T_{VJ} = 25°C			2200	V
I_R	*reverse current*	V_R = 2200 V	T_{VJ} = 25°C			100	µA
		V_R = 2200 V	T_{VJ} = 150°C			2	mA
V_F	*forward voltage drop*	I_F = 70 A	T_{VJ} = 25°C			1,23	V
		I_F = 210 A				1,75	V
		I_F = 70 A	T_{VJ} = 125°C			1,19	V
		I_F = 210 A				1,67	V
I_{DAV}	*bridge output current*	T_C = 85°C rectangular d = ⅓	T_{VJ} = 150°C			210	A
V_{F0}	*threshold voltage* } *for power loss calculation only*		T_{VJ} = 150°C			0,82	V
r_F	*slope resistance*					5,2	mΩ
R_{thJC}	*thermal resistance junction to case*					0,5	K/W
R_{thCH}	*thermal resistance case to heatsink*				0,1		K/W
P_{tot}	*total power dissipation*		T_C = 25°C			250	W
I_{FSM}	*max. forward surge current*	t = 10 ms; (50 Hz), sine	T_{VJ} = 45°C			1,00	kA
		t = 8,3 ms; (60 Hz), sine	V_R = 0 V			1,08	kA
		t = 10 ms; (50 Hz), sine	T_{VJ} = 150°C			850	A
		t = 8,3 ms; (60 Hz), sine	V_R = 0 V			920	A
I^2t	*value for fusing*	t = 10 ms; (50 Hz), sine	T_{VJ} = 45°C			5,00	kA²s
		t = 8,3 ms; (60 Hz), sine	V_R = 0 V			4,85	kA²s
		t = 10 ms; (50 Hz), sine	T_{VJ} = 150°C			3,62	kA²s
		t = 8,3 ms; (60 Hz), sine	V_R = 0 V			3,52	kA²s
C_J	*junction capacitance*	V_R = 400 V; f = 1 MHz	T_{VJ} = 25°C		33		pF

© 2019 IXYS all rights reserved

Brake IGBT + Diode

Symbol	Definition	Conditions		Ratings min.	typ.	max.	Unit
V_{CES}	*collector emitter voltage*		T_{VJ} = 25°C			1200	V
V_{GES}	*max. DC gate voltage*					±20	V
V_{GEM}	*max. transient gate emitter voltage*					±30	V
I_{C25}	*collector current*		T_C = 25°C			120	A
I_{C80}			T_C = 80°C			84	A
P_{tot}	*total power dissipation*		T_C = 25°C			390	W
$V_{CE(sat)}$	*collector emitter saturation voltage*	I_C = 77 A; V_{GE} = 15 V	T_{VJ} = 25°C		1,9	2,2	V
			T_{VJ} = 125°C		2,2		V
$V_{GE(th)}$	*gate emitter threshold voltage*	I_C = 3 mA; V_{GE} = V_{CE}	T_{VJ} = 25°C	5,4	5,9	6,5	V
I_{CES}	*collector emitter leakage current*	V_{CE} = V_{CES}; V_{GE} = 0 V	T_{VJ} = 25°C			0,2	mA
			T_{VJ} = 125°C		0,6		mA
I_{GES}	*gate emitter leakage current*	V_{GE} = ±20 V				500	nA
$Q_{G(on)}$	*total gate charge*	V_{CE} = 600 V; V_{GE} = 15 V; I_C = 77 A			230		nC
$t_{d(on)}$	*turn-on delay time*	inductive load; V_{CE} = 600 V; I_C = 77 A; V_{GE} = ±15 V; R_G = 10 Ω	T_{VJ} = 125°C		70		ns
t_r	*current rise time*				40		ns
$t_{d(off)}$	*turn-off delay time*				250		ns
t_f	*current fall time*				100		ns
E_{on}	*turn-on energy per pulse*				6,8		mJ
E_{off}	*turn-off energy per pulse*				8,3		mJ
RBSOA	*reverse bias safe operating area*	V_{GE} = ±15 V; R_G = 10 Ω	T_{VJ} = 125°C				
I_{CM}		V_{CEK} = 1200 V				225	A
SCSOA	*short circuit safe operating area*	V_{CEK} = 1200 V					
t_{SC}	*short circuit duration*	V_{CE} = 900 V; V_{GE} = ±15	T_{VJ} = 125°C			10	µs
I_{SC}	*short circuit current*	R_G = 10 Ω; non-repetitive			300		A
R_{thJC}	*thermal resistance junction to case*					0,32	K/W
R_{thCH}	*thermal resistance case to heatsink*				0,10		K/W

Brake Diode

Symbol	Definition	Conditions		Ratings min.	typ.	max.	Unit
V_{RRM}	*max. repetitive reverse voltage*		T_{VJ} = 25°C			1200	V
I_{F25}	*forward current*		T_C = 25°C			88	A
I_{F80}			T_C = 80°C			59	A
V_F	*forward voltage*	I_F = 60 A	T_{VJ} = 25°C			2,20	V
			T_{VJ} = 125°C		1,95		V
I_R	*reverse current*	V_R = V_{RRM}	T_{VJ} = 25°C			0,1	mA
			T_{VJ} = 125°C			1,2	mA
Q_{rr}	*reverse recovery charge*	V_R = 600 V; $-di_F/dt$ = 1200 A/µs; I_F = 60 A; V_{GE} = 0 V	T_{VJ} = 125°C		8		µC
I_{RM}	*max. reverse recovery current*				60		A
t_{rr}	*reverse recovery time*				350		ns
E_{rec}	*reverse recovery energy*				2,5		mJ
R_{thJC}	*thermal resistance junction to case*					0,6	K/W
R_{thCH}	*thermal resistance case to heatsink*				0,1		K/W

© 2019 IXYS all rights reserved

Package E2-Pack

Symbol	Definition	Conditions		Ratings min.	typ.	max.	Unit
I_{RMS}	*RMS current*	per terminal				30	A
T_{VJ}	*virtual junction temperature*			-40		150	°C
T_{op}	*operation temperature*			-40		125	°C
T_{stg}	*storage temperature*			-40		125	°C
Weight					176		g
M_D	*mounting torque*			3		6	Nm
$d_{Spp/App}$	*creepage distance on surface | striking distance through air*		*terminal to terminal*	6,0			mm
$d_{Spb/Apb}$			*terminal to backside*	12,0			mm
V_{ISOL}	*isolation voltage*	t = 1 second	50/60 Hz, RMS; I_{ISOL} ≤ 1 mA	4300			V
		t = 1 minute		3600			V

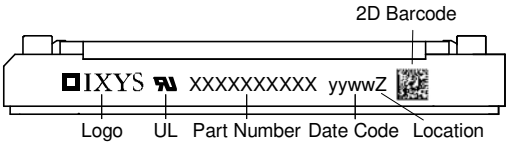

Part description

M = Module
D = Diode
M = Standard Rectifier
A = (up to 1800V)
210 = Current Rating [A]
UB = 3~ Rectifier Bridge + Brake Unit
1600 = Reverse Voltage [V]
PT = PressFit-Pin, Thermistor
ED = E2-Pack
- = Hyphen
PC = Phase Change Material

Ordering	Ordering Number	Marking on Product	Delivery Mode	Quantity	Code No.
Standard	MDMA210UB1600PTED	MDMA210UB1600PTED	Blister	28	516606
Alternative	MDMA210UB1600PTED-PC	MDMA210UB1600PTED	Blister	28	515409

Temperature Sensor NTC

Symbol	Definition	Conditions	min.	typ.	max.	Unit
R_{25}	*resistance*	T_{VJ} = 25°	4,85	5	5,15	kΩ
$B_{25/50}$	*temperature coefficient*			3375		K

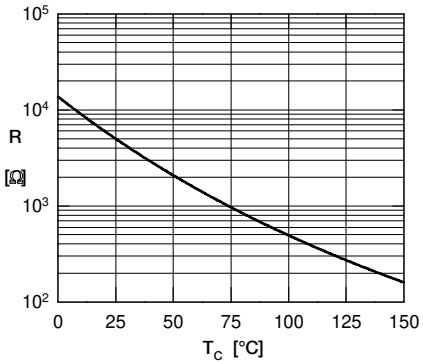

Typ. NTC resistance vs. temperature

Equivalent Circuits for Simulation

** on die level* T_{VJ} = 150°C

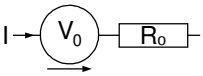

		Rectifier	Brake IGBT +	Brake Diode	
$V_{0\,max}$	*threshold voltage*	0,82	1,1	1,22	V
$R_{0\,max}$	*slope resistance **	3,1	17,9	13	mΩ

© 2019 IXYS all rights reserved

Outlines E2-Pack

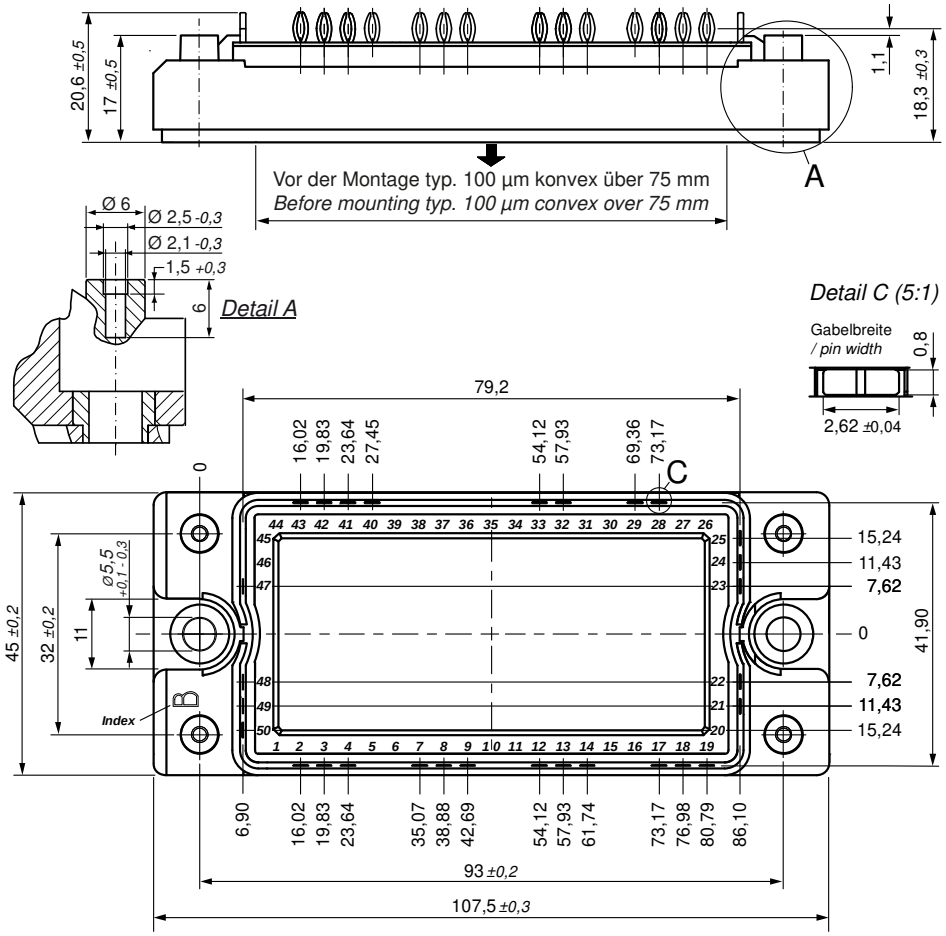

Bemerkung / ***Note:***

- Nicht tolerierte Maße nach / *Measure without tolerances according DIN ISO 2768-T1-m*
- PCB-Lochmuster / *PCB hole pattern:* **see pin position**
- Toleranz Pin-Position und PCB-Lochmuster / *Tolerance of pin position and PCB hole pattern:* ⊕ **0.1**
- Bohrlochdurchmesser / *Diameter of drill:* **Ø 2.35 mm**
- Endlochdurchmesser / *Diameter of plated holes:* **Ø 2.14 - 2.29 mm** (Cu thickness in via typ. 50 µm)
- Beschichtung / *Plating:* **chem. Sn max. 15 µm**
- Einpresskraft / *Insert Force:* per terminal with a typ. insert speed of 7 mm/s: **typ. 90 N**
- Weitere Angaben / *Further information:* www.ixys.com **Application note IXAN0077**
- Montageanleitung / *Mounting instruction:* www.ixys.com **Application note IXAN0024**

***Detail A*:** PCB-Montage / *Mounting on PCB*

- Empfohlene, selbstschneidende Schraube / *Recommended, self-tapping screw:* **EJOT PT®** (Größe / *size:* **K25**)
- Max. Schraubenlänge / *Max. screw length:* **PCB-Dicke** / **thickness + 6 mm** (max. Lochtiefe / *hole depth)*
- Empfohlenes Drehmoment / *Recommended mounting torque:* **1.5 Nm**

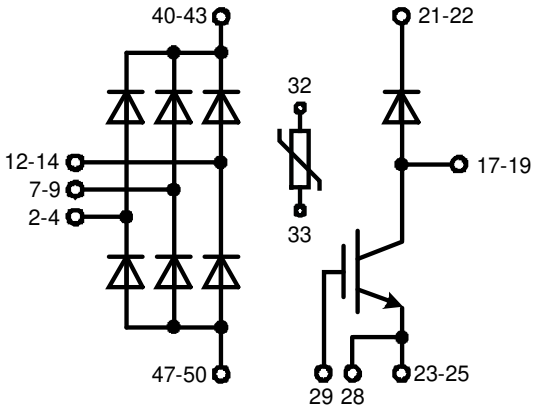

© 2019 IXYS all rights reserved

Rectifier

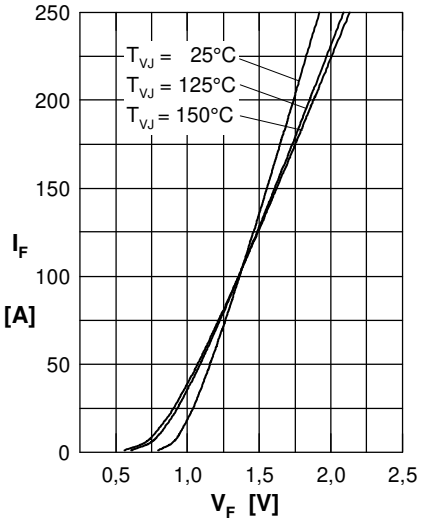

Fig. 1 Forward current versus voltage drop per diode

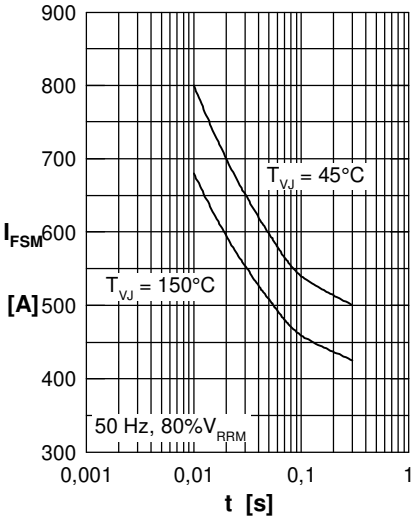

Fig. 2 Surge overload current vs. time per diode

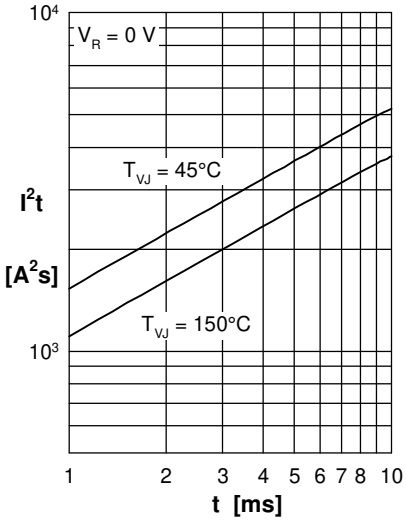

Fig. 3 I^2t versus time per diode

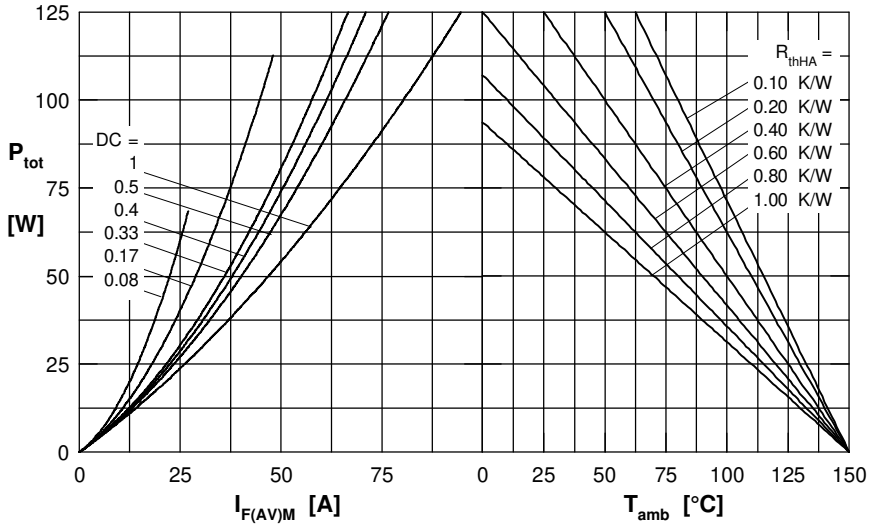

Fig. 4 Power dissipation vs. forward current and ambient temperature per diode

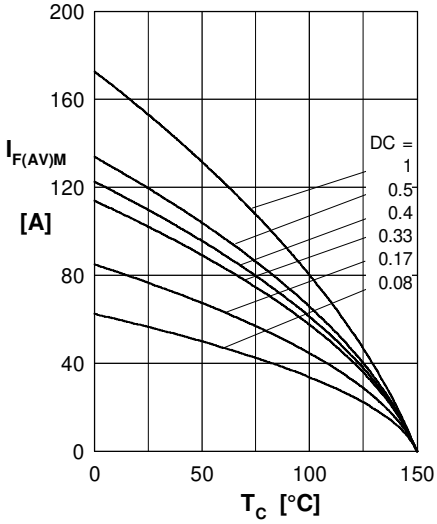

Fig. 5 Max. forward current vs. case temperature per diode

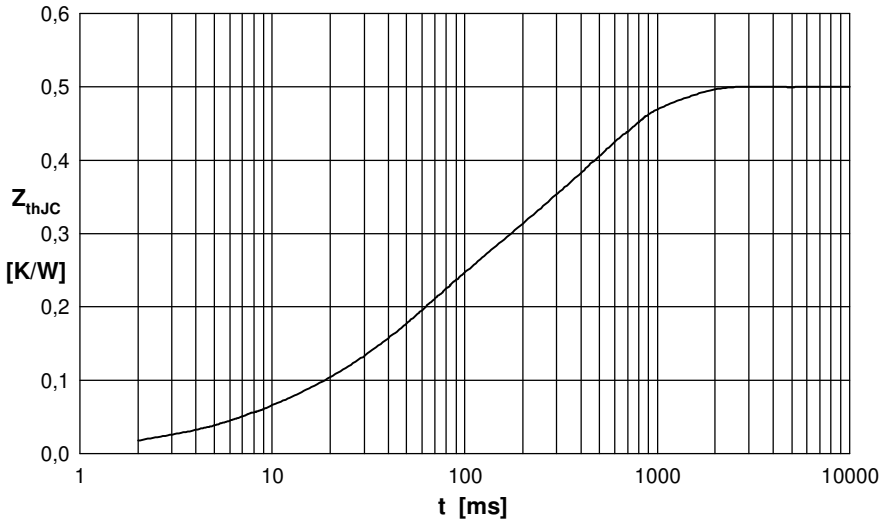

Fig. 6 Transient thermal impedance junction to case vs. time per diode

Constants for Z_{thJC} calculation:

i	R_{thi} (K/W)	t_i (s)
1	0.030	0.006
2	0.003	0.007
3	0.182	0.045
4	0.285	0.450

© 2019 IXYS all rights reserved