IXYS

Polar™ Power MOSFET
HiPerFET™

IXFV22N50P
IXFV22N50PS
IXFH22N50P

V_{DSS} = 500V
I_{D25} = 22A
$R_{DS(on)}$ ≤ 270mΩ
t_{rr} ≤ 200ns

N-Channel Enhancement Mode
Avalanche Rated
Fast Intrinsic Diode

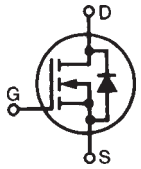

PLUS220 (IXFV)

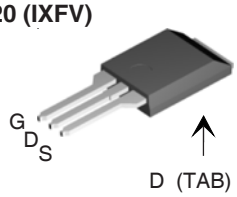

PLUS220SMD (IXFV_S)

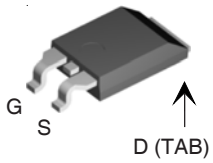

TO-247 (IXFH)

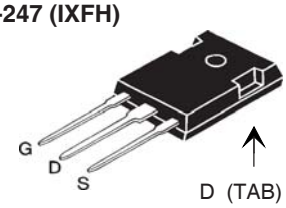

G = Gate D = Drain
S = Source TAB = Drain

Symbol	Test Conditions	Maximum Ratings	
V_{DSS}	T_J = 25°C to 150°C	500	V
V_{DGR}	T_J = 25°C to 150°C, R_{GS} = 1MΩ	500	V
V_{GSS}	Continuous	± 30	V
V_{GSM}	Transient	± 40	V
I_{D25}	T_C = 25°C	22	A
I_{DM}	T_C = 25°C, Pulse Width Limited by T_{JM}	50	A
I_A	T_C = 25°C	22	A
E_{AS}	T_C = 25°C	750	mJ
dV/dt	$I_S \le I_{DM}$, $V_{DD} \le V_{DSS}$, $T_J \le 150°C$	10	V/ns
P_D	T_C = 25°C	350	W
T_J		-55 ... +150	°C
T_{JM}		150	°C
T_{stg}		-55 ... +150	°C
T_L	Maximum Lead Temperature for Soldering	300	°C
T_{SOLD}	Plastic Body for 10s	260	°C
M_d	Mounting Torque (TO-247)	1.13/10	Nm/lb.in.
F_C	Mounting Force (PLUS 220)	11..65/2.5..14.6	N/lb.
Weight	TO-247	6	g
	PLUS 220 types	4	g

Symbol	Test Conditions (T_J = 25°C, Unless Otherwise Specified)	Characteristic Values Min.	Typ.	Max.	
BV_{DSS}	V_{GS} = 0V, I_D = 250μA	500			V
$V_{GS(th)}$	$V_{DS} = V_{GS}$, I_D = 2.5mA	3.0		5.5	V
I_{GSS}	V_{GS} = ± 30V, V_{DS} = 0V			± 100	nA
I_{DSS}	$V_{DS} = V_{DSS}$, V_{GS} = 0V			15	μA
	T_J = 125°C			250	μA
$R_{DS(on)}$	V_{GS} = 10V, $I_D = 0.5 \bullet I_{D25}$, Note 1			270	mΩ

Features

- International Standard Packages
- Avalanche Rated
- Fast Intrinsic Diode
- Low Package Inductance

Advantages

- High Power Density
- Easy to Mount
- Space Savings

Applications

- Switched-Mode and Resonant-Mode Power Supplies
- DC-DC Converters
- Laser Drivers
- AC and DC Motor Drives
- Robotics and Servo Controls

© 2009 IXYS CORPORATION, All Rights Reserved

Symbol	Test Conditions (T_J = 25°C Unless Otherwise Specified)	Characteristic Values Min.	Typ.	Max.	
g_{fs}	V_{DS} = 20V, I_D = 0.5 • I_{D25}, Note 1	12	20		S
C_{iss}	V_{GS} = 0V, V_{DS} = 25V, f = 1MHz		2880		pF
C_{oss}			310		pF
C_{rss}			29		pF
$t_{d(on)}$	**Resistive Switching Times**		22		ns
t_r	V_{GS} = 10V, V_{DS} = 0.5 • V_{DSS}, I_D = 0.5 • I_{D25}		25		ns
$t_{d(off)}$	R_G = 10Ω (External)		72		ns
t_f			21		ns
$Q_{g(on)}$	V_{GS} = 10V, V_{DS} = 0.5 • V_{DSS}, I_D = 0.5 • I_{D25}		50		nC
Q_{gs}			16		nC
Q_{gd}			18		nC
R_{thJC}				0.35	°C/W
R_{thCS}	(TO-247 & PLUS220)		0.25		°C/W

Source-Drain Diode

Symbol	Test Conditions (T_J = 25°C Unless Otherwise Specified)	Characteristic Values Min.	Typ.	Max.	
I_S	V_{GS} = 0V			22	A
I_{SM}	Repetitive, Pulse Width Limited by T_{JM}			88	A
V_{SD}	I_F = I_S, V_{GS} = 0V, Note 1			1.5	V
t_{rr}	I_F = 22A, -di/dt = 100A/μs			200	ns
Q_{RM}	V_R = 100V, V_{GS} = 0V		0.7		μC
I_{RM}			7.0		A

Note 1: Pulse test, t ≤ 300μs; duty cycle, d ≤ 2%.

PLUS220SMD (IXFV_S) Outline

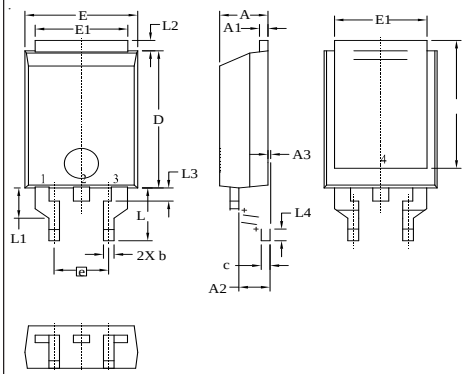

Terminals: 1 - Gate 2 - Drain
3 - Source TAB - Drain

SYM	INCHES MIN	INCHES MAX	MILLIMETER MIN	MILLIMETER MAX
A	.169	.185	4.30	4.70
A1	.028	.035	0.70	0.90
A2	.098	.118	2.50	3.00
A3	.000	.010	0.00	0.25
b	.035	.047	0.90	1.20
c	.028	.035	0.70	0.90
D	.551	.591	14.00	15.00
D1	.512	.539	13.00	13.70
E	.394	.433	10.00	11.00
E1	.331	.346	8.40	8.80
e	.200BSC		5.08 BSC	
L	.209	.228	5.30	5.80
L1	.118	.138	3.00	3.50
L2	.035	.051	0.90	1.30
L3	.047	.059	1.20	1.50
L4	.039	.059	1.00	1.50

PLUS220 (IXFV) Outline

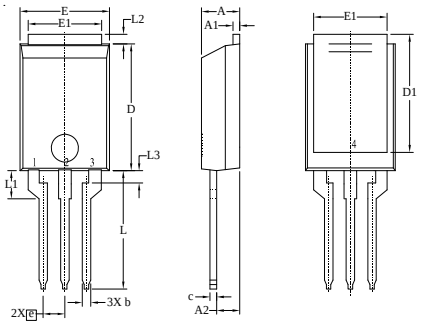

Terminals: 1 - Gate 2 - Drain
3 - Source TAB - Drain

SYM	INCHES MIN	INCHES MAX	MILLIMETER MIN	MILLIMETER MAX
A	.169	.185	4.30	4.70
A1	.028	.035	0.70	0.90
A2	.098	.118	2.50	3.00
b	.035	.047	0.90	1.20
c	.028	.035	0.70	0.90
D	.551	.591	14.00	15.00
D1	.512	.539	13.00	13.70
E	.394	.433	10.00	11.00
E1	.331	.346	8.40	8.80
e	.100 BSC		2.54 BSC	
L	.512	.551	13.00	14.00
L1	.118	.138	3.00	3.50
L2	.035	.051	0.90	1.30
L3	.047	.059	1.20	1.50

TO-247 (IXFH) Outline

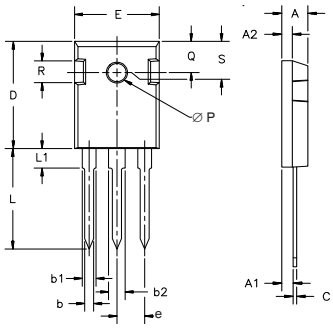

Dim.	Millimeter Min.	Millimeter Max.	Inches Min.	Inches Max.
A	4.7	5.3	.185	.209
A_1	2.2	2.54	.087	.102
A_2	2.2	2.6	.059	.098
b	1.0	1.4	.040	.055
b_1	1.65	2.13	.065	.084
b_2	2.87	3.12	.113	.123
C	.4	.8	.016	.031
D	20.80	21.46	.819	.845
E	15.75	16.26	.610	.640
e	5.20	5.72	0.205	0.225
L	19.81	20.32	.780	.800
L1		4.50		.177
ØP	3.55	3.65	.140	.144
Q	5.89	6.40	0.232	0.252
R	4.32	5.49	.170	.216
S	6.15	BSC	242	BSC

IXYS Reserves the Right to Change Limits, Test Conditions, and Dimensions.

IXYS MOSFETs and IGBTs are covered by one or more of the following U.S. patents: 4,835,592 4,850,072 4,881,106 4,931,844 5,017,508 5,034,796 5,049,961 5,063,307 5,187,117 5,237,481 5,381,025 5,486,715 6,162,665 6,259,123 B1 6,306,728 B1 6,404,065 B1 6,534,343 6,583,505 6,683,344 6,710,405 B2 6,710,463 6,727,585 6,759,692 6,771,478 B2 7,005,734 B2 7,063,975 B2 7,071,537 7,157,338B2

Fig. 1. Output Characteristics @ 25ºC

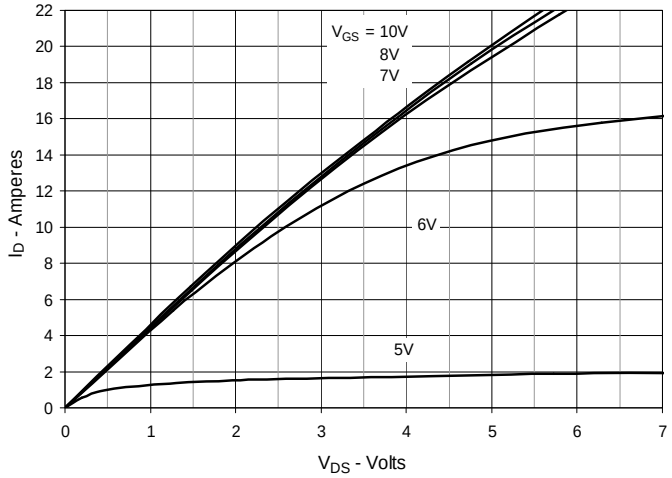

Fig. 2. Extended Output Characteristics @ 25ºC

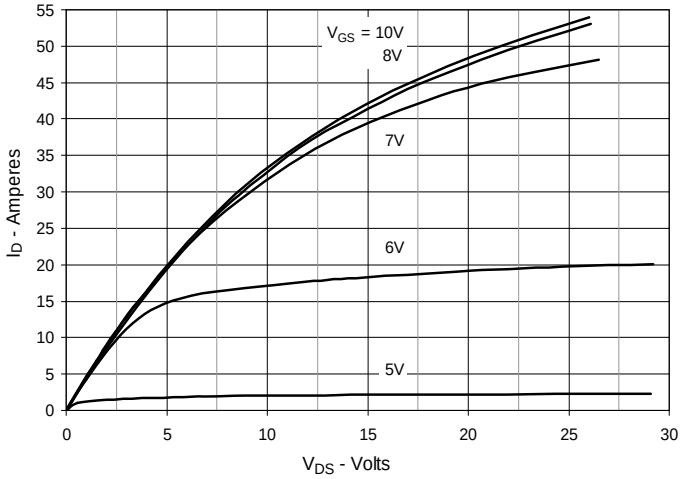

Fig. 3. Output Characteristics @ 125ºC

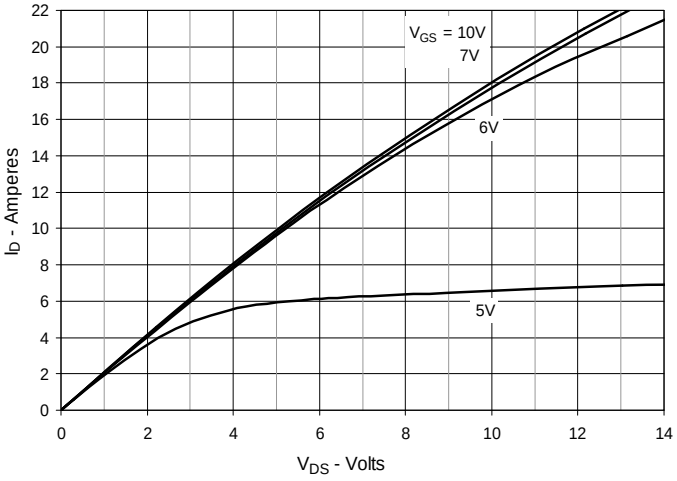

Fig. 4. $R_{DS(on)}$ Normalized to I_D = 11A Value vs. Junction Temperature

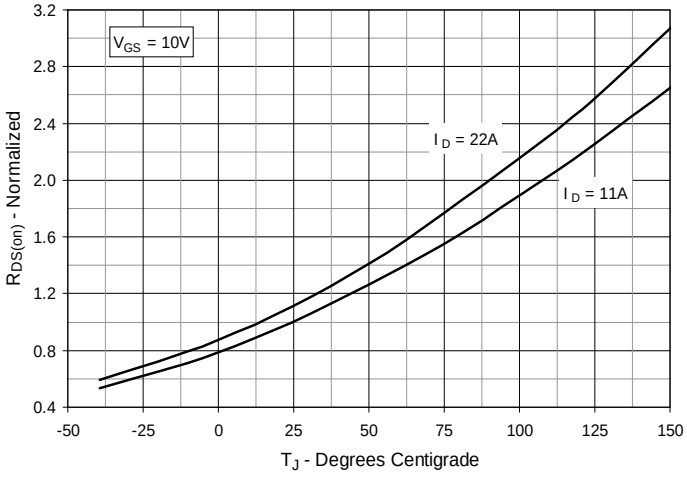

Fig. 5. $R_{DS(on)}$ Normalized to I_D = 11A Value vs. Drain Current

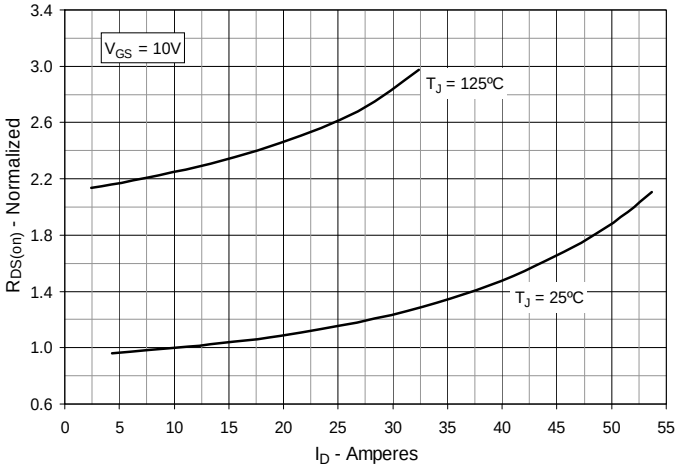

Fig. 6. Maximum Drain Current vs. Case Temperature

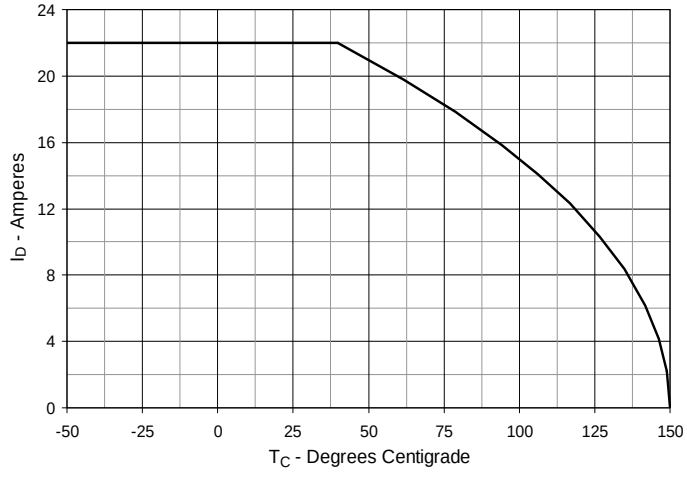

© 2009 IXYS CORPORATION, All Rights Reserved

Fig. 7. Input Admittance

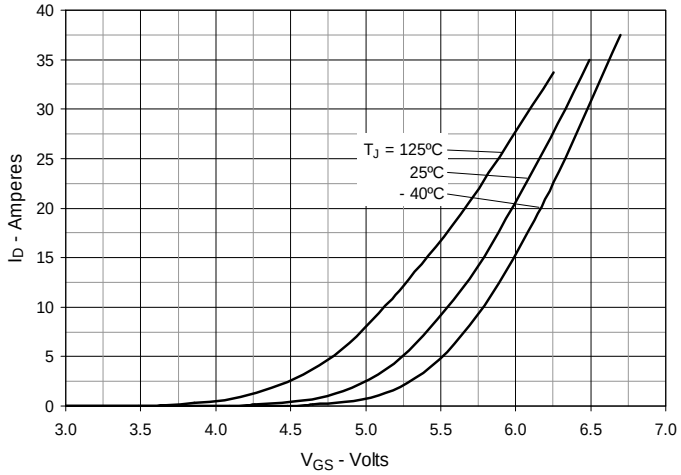

Fig. 8. Transconductance

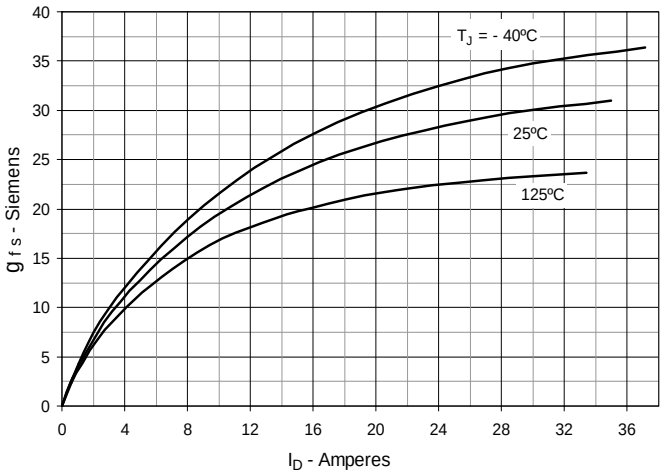

Fig. 9. Forward Voltage Drop of Intrinsic Diode

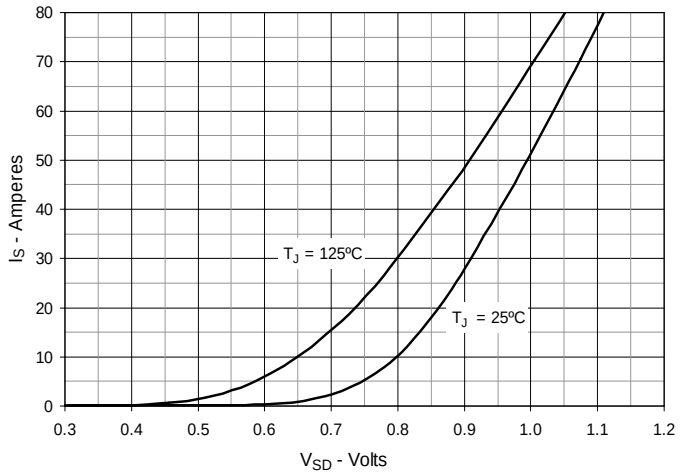

Fig. 10. Gate Charge

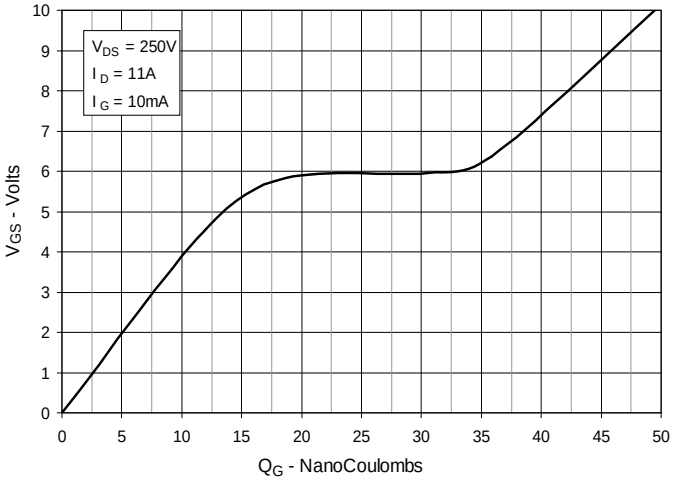

Fig. 11. Capacitance

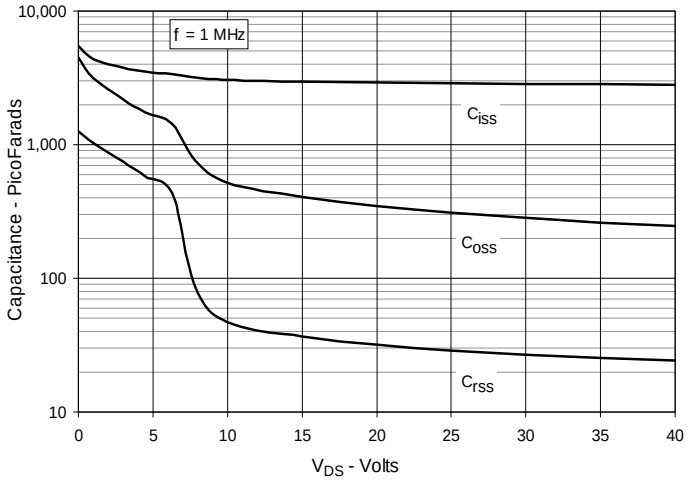

Fig. 12. Forward-Bias Safe Operating Area

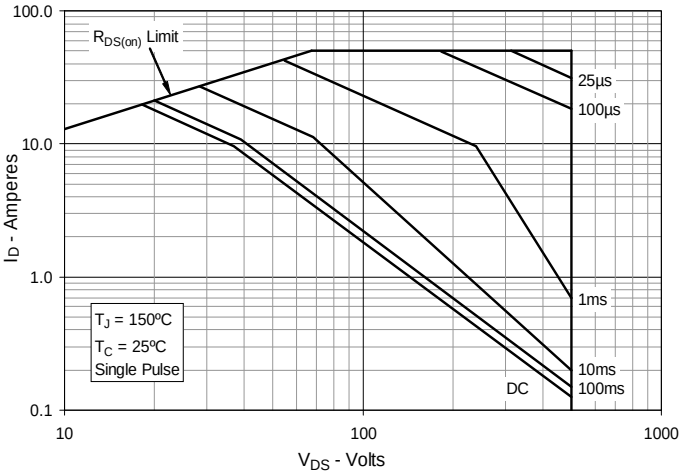

Fig. 13. Maximum Transient Thermal Impedance

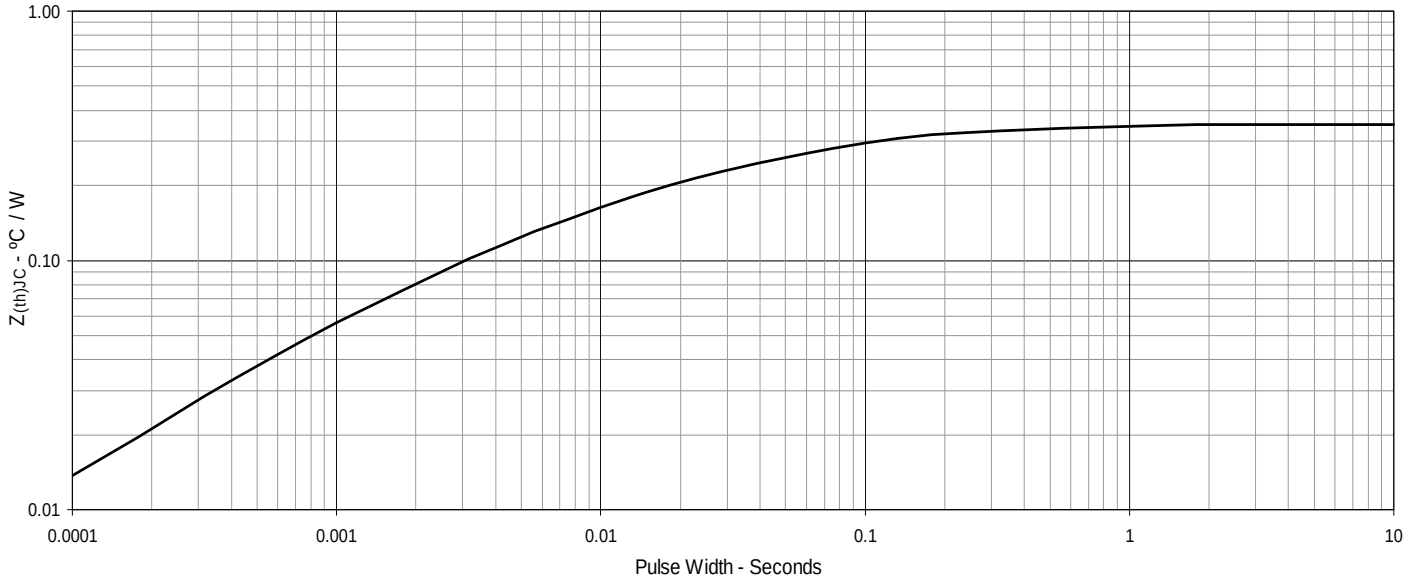

© 2009 IXYS CORPORATION, All Rights Reserved

Disclaimer Notice - Information furnished is believed to be accurate and reliable. However, users should independently evaluate the suitability of and test each product selected for their own applications. Littelfuse products are not designed for, and may not be used in, all applications. Read complete Disclaimer Notice at www.littelfuse.com/disclaimer-electronics.