Date:- 17th February, 2021

Data Sheet Issue:- 4

Phase Control Thyristor

Types N3533Z#140 to N3533Z#220

Old Type No.: N1400CH02-20

Absolute Maximum Ratings

	VOLTAGE RATINGS	MAXIMUM LIMITS	UNITS
V_{DRM}	Repetitive peak off-state voltage, (note 1)	1400-2200	V
V_{DSM}	Non-repetitive peak off-state voltage, (note 1)	1400-2200	V
V_{RRM}	Repetitive peak reverse voltage, (note 1)	1400-2200	V
V_{RSM}	Non-repetitive peak reverse voltage, (note 1)	1500-2300	V

	OTHER RATINGS	MAXIMUM LIMITS	UNITS
$I_{T(AV)}$	Mean on-state current. T_{sink}=55°C, (note 2)	3420	A
$I_{T(AV)}$	Mean on-state current. T_{sink}=85°C, (note 2)	2320	A
$I_{T(AV)}$	Mean on-state current. T_{sink}=85°C, (note 3)	1390	A
$I_{T(RMS)}$	Nominal RMS on-state current. T_{sink}=25°C, (note 2)	6780	A
$I_{T(d.c.)}$	D.C. on-state current. T_{sink}=25°C, (note 4)	5800	A
I_{TSM}	Peak non-repetitive surge t_p=10ms, V_{rm}=0.6V_{RRM}, (note 5)	50	kA
I_{TSM2}	Peak non-repetitive surge t_p=10ms, V_{rm}≤10V, (note 5)	60	kA
I^2t	I^2t capacity for fusing t_p=10ms, V_{rm}=0.6V_{RRM}, (note 5)	12.5×10^6	A^2s
I^2t	I^2t capacity for fusing t_p=10ms, V_{rm}≤10V, (note 5)	18.0×10^6	A^2s
di_T/dt	Maximum rate of rise of on-state current (repetitive), (Note 6)	150	A/µs
	Maximum rate of rise of on-state current (non-repetitive), (Note 6)	300	A/µs
V_{RGM}	Peak reverse gate voltage	5	V
$P_{G(AV)}$	Mean forward gate power	5	W
P_{GM}	Peak forward gate power	30	W
V_{GD}	Non-trigger gate voltage, (Note 7)	0.25	V
T_{HS}	Operating temperature range	-40 to +125	°C
T_{stg}	Storage temperature range	-40 to +150	°C

Notes: -
1) De-rating factor of 0.13% per °C is applicable for T_j below 25°C.
2) Double side cooled, single phase; 50Hz, 180° half-sinewave.
3) Single side cooled, single phase; 50Hz, 180° half-sinewave.
4) Double side cooled.
5) Half-sinewave, 125°C T_j initial.
6) V_D=67% V_{DRM}, I_{TM}=1000A, I_{FG}=2A, t_r≤0.5µs, T_{case}=125°C.
7) Rated V_{DRM}.

Characteristics

	PARAMETER	MIN.	TYP.	MAX.	TEST CONDITIONS (Note 1)	UNITS
V_{TM}	Maximum peak on-state voltage	-	-	1.25	I_{TM}=3000A	V
V_{TM}	Maximum peak on-state voltage	-	-	1.73	I_{TM}=7200A	V
V_{T0}	Threshold voltage	-	-	0.93		V
r_T	Slope resistance	-	-	0.11		mΩ
dv/dt	Critical rate of rise of off-state voltage	1000	-	-	V_D=80% V_{DRM}, linear ramp, Gate O/C	V/µs
I_{DRM}	Peak off-state current	-	-	200	Rated V_{DRM}	mA
I_{RRM}	Peak reverse current	-	-	200	Rated V_{RRM}	mA
V_{GT}	Gate trigger voltage	-	-	3.0	T_j=25°C, V_D=10V, I_T=3A	V
I_{GT}	Gate trigger current	-	-	300		mA
I_H	Holding current	-	-	1000	T_j=25°C	mA
t_{gd}	Gate controlled turn-on delay time	-	1.0	2.0	V_D=67%V_{DRM}, I_{TM}=2000A, di/dt=10A/µs, I_{FG}=2A, t_r=0.5µs, T_j=25°C	µs
t_{gt}	Turn-on time	-	2.0	3.0		
Q_{rr}	Recovered Charge	-	4000	4400	I_{TM}=4000A, t_p=1000µs, di/dt=10A/µs, V_r=50V	µC
Q_{ra}	Recovered Charge, 50% chord	-	2450	-		µC
I_{rm}	Reverse recovery current	-	160	-		A
t_{rr}	Reverse recovery time, 50% chord	-	30	-		µs
t_q	Turn-off time	-	250	-	I_{TM}=4000A, t_p=1000µs, di/dt=10A/µs, V_r=50V, V_{dr}=80%V_{DRM}, dV_{dr}/dt=20V/µs	µs
		-	450	-	I_{TM}=4000A, t_p=1000µs, di/dt=10A/µs, V_r=50V, V_{dr}=80%V_{DRM}, dV_{dr}/dt=200V/µs	
$R_{th(j-hs)}$	Thermal resistance, junction to heatsink	-	-	0.011	Double side cooled	K/W
		-	-	0.022	Single side cooled	K/W
F	Mounting force	27	-	47		kN
W_t	Weight	-	1.7	-	Outline options ZC & ZT	kg
		-	1.2	-	Outline options ZD & ZV	

Notes: -
1) Unless otherwise indicated T_j=125°C.
2) For other clamp forces please consult factory.

Notes on rupture rated packages.
This product is available with a non-rupture rated package. For additional details on these products, please consult factory.

Notes on Ratings and Characteristics

1.0 Voltage Grade Table

Voltage Grade	V_{DRM} V_{DSM} V_{RRM} V	V_{RSM} V	V_D V_R DC V
14	1400	1500	930
16	1600	1700	1040
18	1800	1900	1150
20	2000	2100	1250
22	2200	2300	1350

2.0 Extension of Voltage Grades

This report is applicable to other and higher voltage grades when supply has been agreed by Sales/Production.

3.0 De-rating Factor

A blocking voltage de-rating factor of 0.13%/°C is applicable to this device for T_j below 25°C.

4.0 Repetitive dv/dt

Standard dv/dt is 1000V/µs.

5.0 Rate of rise of on-state current

The maximum un-primed rate of rise of on-state current must not exceed 300A/µs at any time during turn-on on a non-repetitive basis. For repetitive performance, the on-state rate of rise of current must not exceed 150A/µs at any time during turn-on. Note that these values of rate of rise of current apply to the total device current including that from any local snubber network.

6.0 Gate Drive

The recommended pulse gate drive is 30V, 15Ω with a short-circuit current rise time of not more than 0.5µs. This gate drive must be applied when using the full di/dt capability of the device.

The pulse duration may need to be configured according to the application but should be no shorter than 20µs, otherwise an increase in pulse current may be needed to supply the necessary charge to trigger.

7.0 Computer Modelling Parameters

7.1 Device Dissipation Calculations

$$I_{AV} = \frac{-V_{T0} + \sqrt{V_{T0}^{\ 2} + 4 \cdot ff^2 \cdot r_T \cdot W_{AV}}}{2 \cdot ff^2 \cdot r_T}$$

and:

$$W_{AV} = \frac{\Delta T}{R_{th}}$$

$$\Delta T = T_{j\max} - T_K$$

Where V_{T0}=0.93V, r_T=0.11mΩ,

R_{th} = Supplementary thermal impedance, see table below.

ff = Form factor, see table below.

Supplementary Thermal Impedance							
Conduction Angle	30°	60°	90°	120°	180°	270°	d.c.
Square wave Double Side Cooled	0.0124	0.0122	0.0121	0.0119	0.0117	0.0113	0.011
Square wave Single Side Cooled	0.0249	0.0248	0.0247	0.0246	0.0244	0.0241	0.022
Sine wave Double Side Cooled	0.0168	0.0140	0.0131	0.0118	0.0112		
Sine wave Single Side Cooled	0.0249	0.0247	0.0246	0.0244	0.0241		

Form Factors							
Conduction Angle	30°	60°	90°	120°	180°	270°	d.c.
Square wave	3.46	2.45	2	1.73	1.41	1.15	1
Sine wave	3.98	2.78	2.22	1.88	1.57		

7.2 Calculating V_T using ABCD Coefficients

The on-state characteristic I_T vs. V_T, on page 5 is represented in two ways;
(i) the well established V_{T0} and r_T tangent used for rating purposes and
(ii) a set of constants A, B, C, D, forming the coefficients of the representative equation for V_T in terms of I_T given below:

$$V_T = A + B \cdot \ln(I_T) + C \cdot I_T + D \cdot \sqrt{I_T}$$

The constants, derived by curve fitting software, are given below for both hot and cold characteristics. The resulting values for V_T agree with the true device characteristic over a current range, which is limited to that plotted.

	25°C Coefficients	125°C Coefficients
A	1.363284	0.7812782
B	-0.06655174	-0.01336261
C	3.92593×10^{-5}	6.63246×10^{-5}
D	7.158369×10^{-3}	6.898973×10^{-3}

7.3 D.C. Thermal Impedance Calculation

$$r_t = \sum_{p=1}^{p=n} r_p \cdot \left(1 - e^{\frac{-t}{\tau_p}}\right)$$

Where *p = 1* to *n, n* is the number of terms in the series and:
t =Duration of heating pulse in seconds.
r_t =Thermal resistance at time t.
r_p =Amplitude of p_{th} term.
τ_p =Time Constant of r_{th} term.

D.C. Double Side Cooled				
Term	1	2	3	4
r_p	6.72×10^{-3}	2.78×10^{-3}	9.476×10^{-4}	7.12×10^{-4}
τ_p	1.0226	0.226	0.0586	9.06×10^{-3}

D.C. Single Side Cooled				
Term	1	2	3	4
r_p	0.01688	4.42×10^{-3}	1.79×10^{-3}	8.72×10^{-4}
τ_p	7.055	0.5206	0.1198	0.0128

8.0 Reverse recovery ratings

(i) Q_{ra} is based on 50% I_{rm} chord as shown in Fig. 1.
(ii) Q_{rr} is based on a 150µs integration time.

i.e.
$$Q_{rr} = \int_0^{150\mu s} i_{rr}.dt$$

(iii)
$$K\ Factor = \frac{t1}{t2}$$

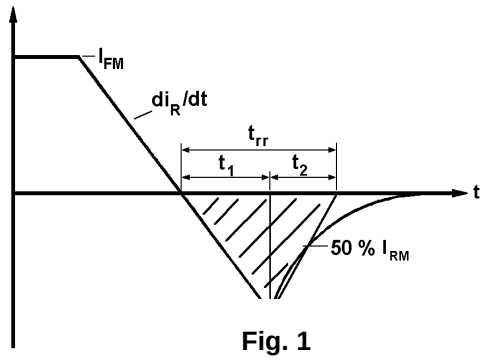

Fig. 1

Curves

Figure 1 - On-state characteristics of Limit device

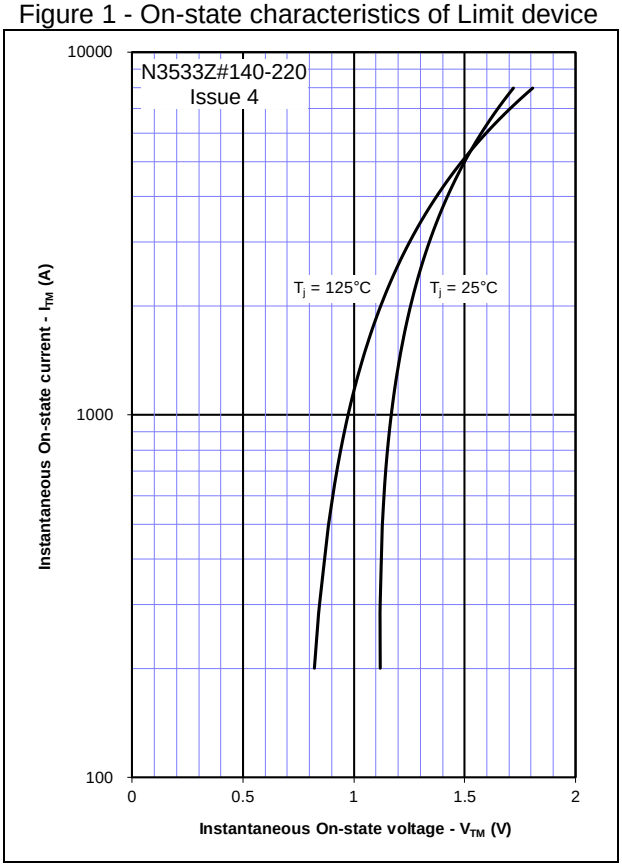

Figure 2 - Transient Thermal Impedance

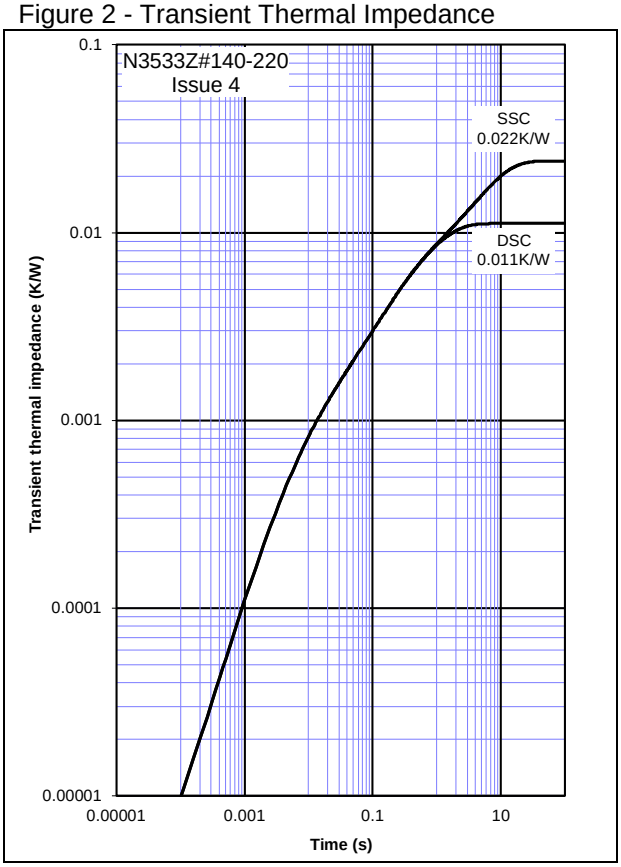

Figure 3 - Gate Characteristics - Trigger Limits

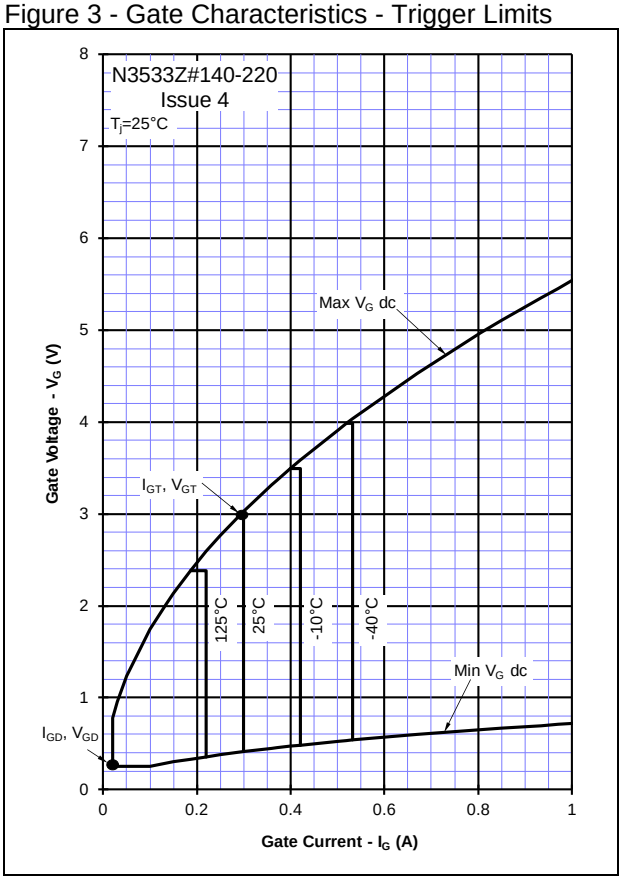

Figure 4 - Gate Characteristics - Power Curves

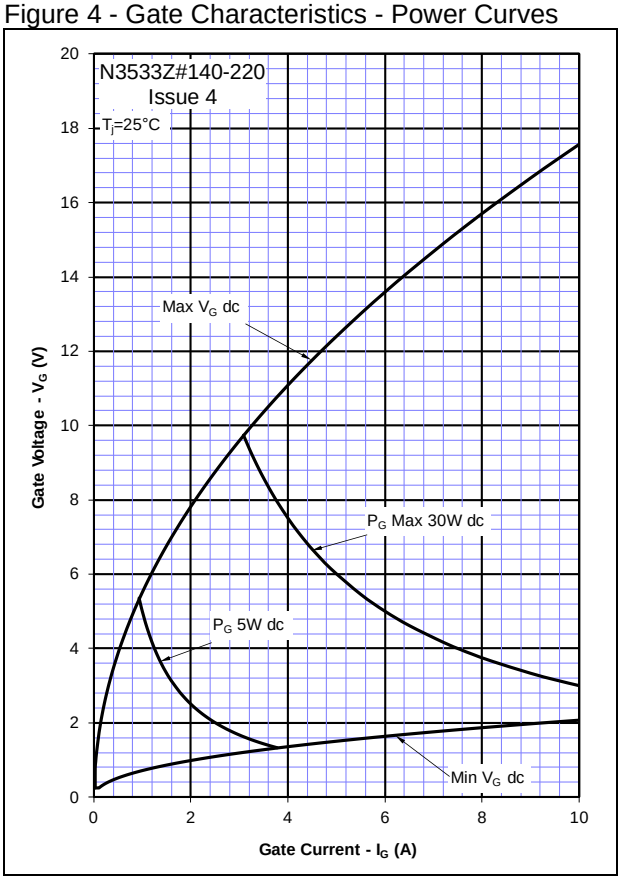

Figure 5 – Recovered Charge, Q_{rr}

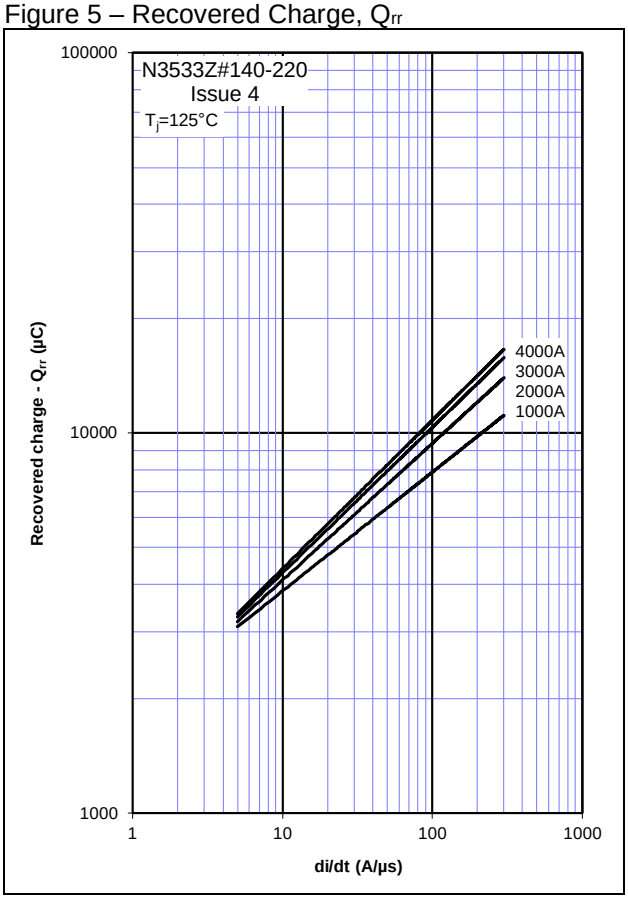

Figure 6 – Recovered charge, Q_{ra} (50% chord)

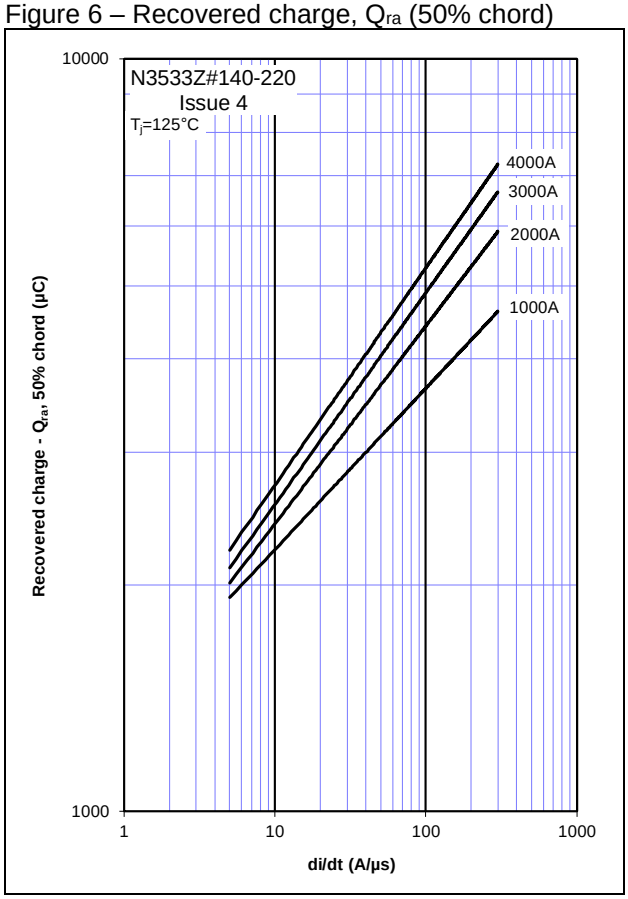

Figure 7 – Reverse recovery current, I_{rm}

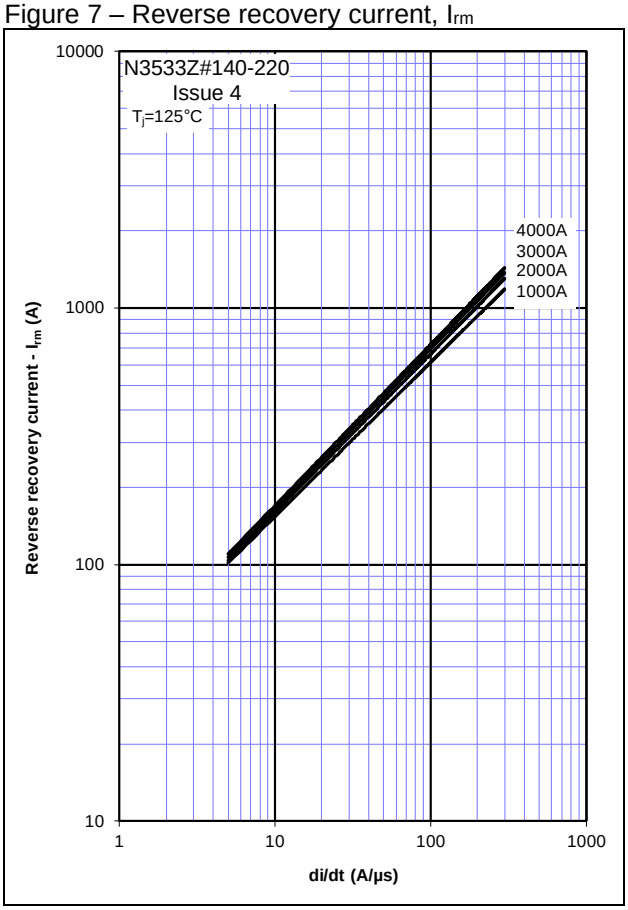

Figure 8 – Reverse recovery time, t_{rr} (50% chord)

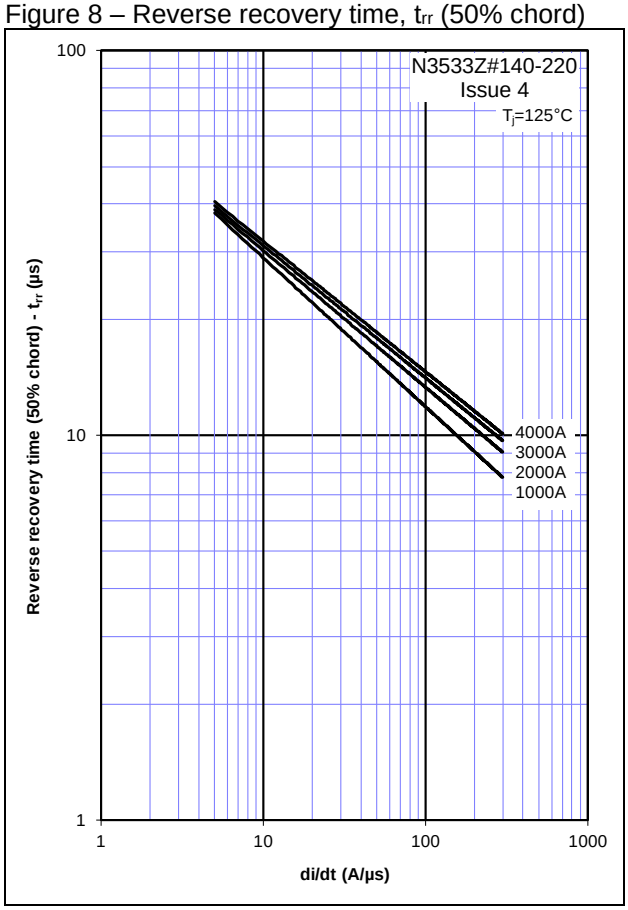

Figure 9 – On-state current vs. Power dissipation – Double Side Cooled (Sine wave)

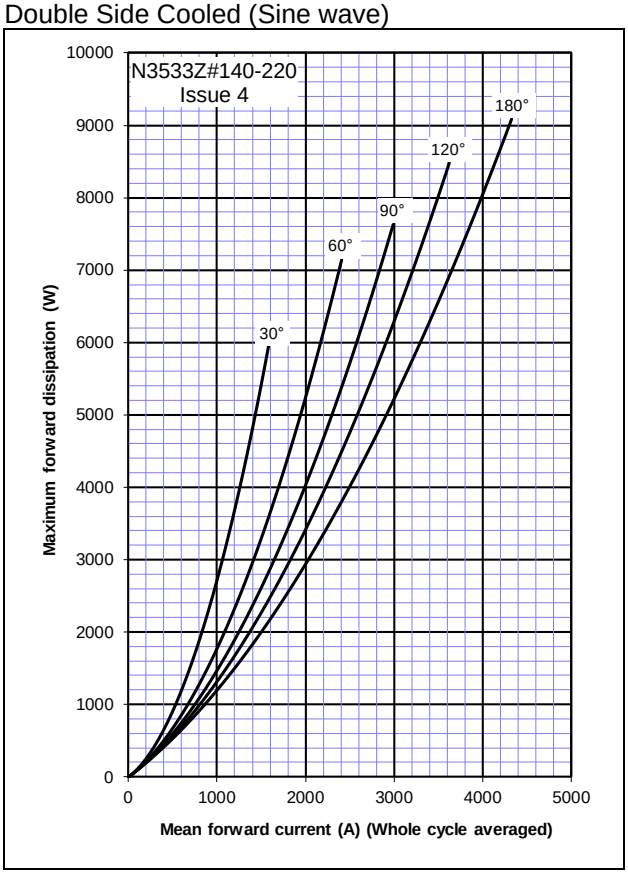

Figure 10 – On-state current vs. Heatsink temperature - Double Side Cooled (Sine wave)

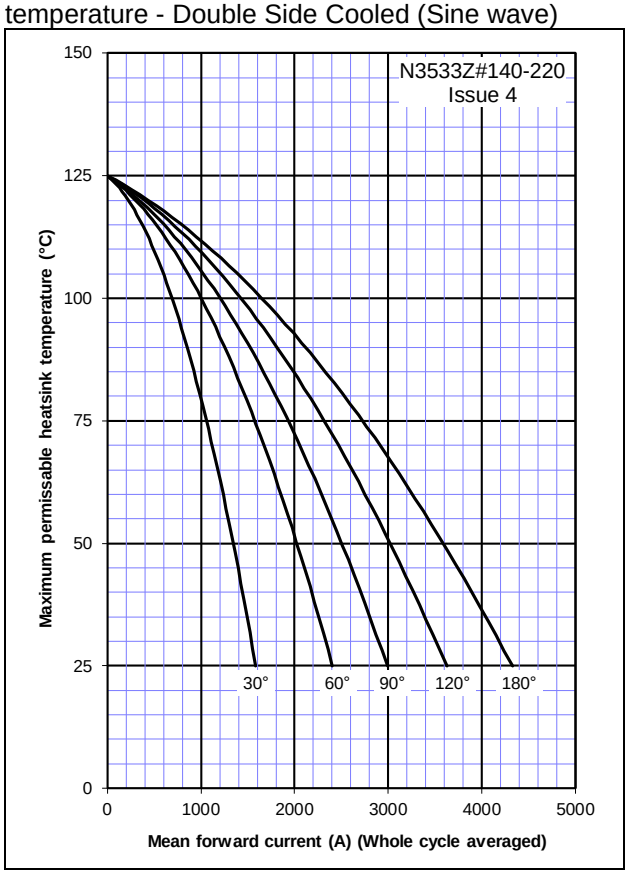

Figure 11 – On-state current vs. Power dissipation – Double Side Cooled (Square wave)

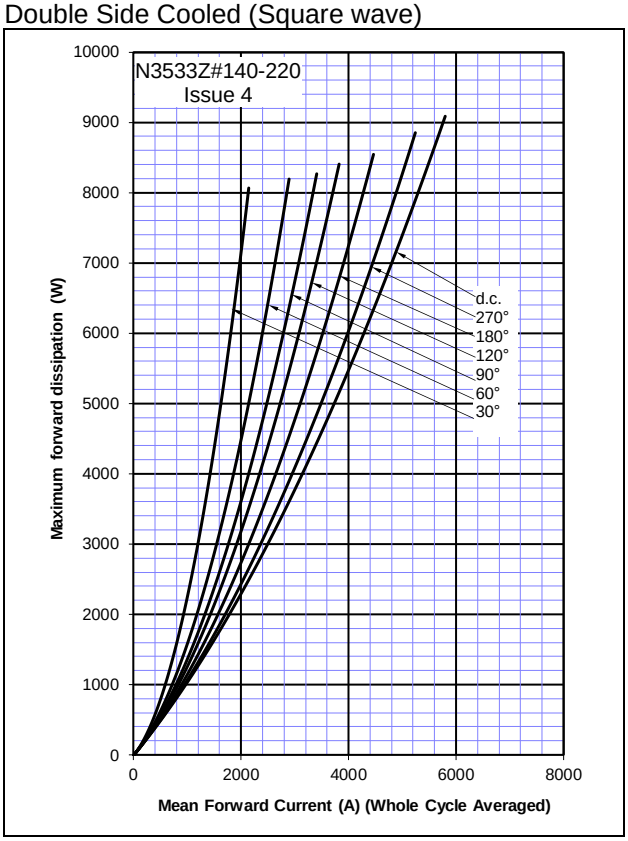

Figure 12 – On-state current vs. Heatsink temperature - Double Side Cooled (Square wave)

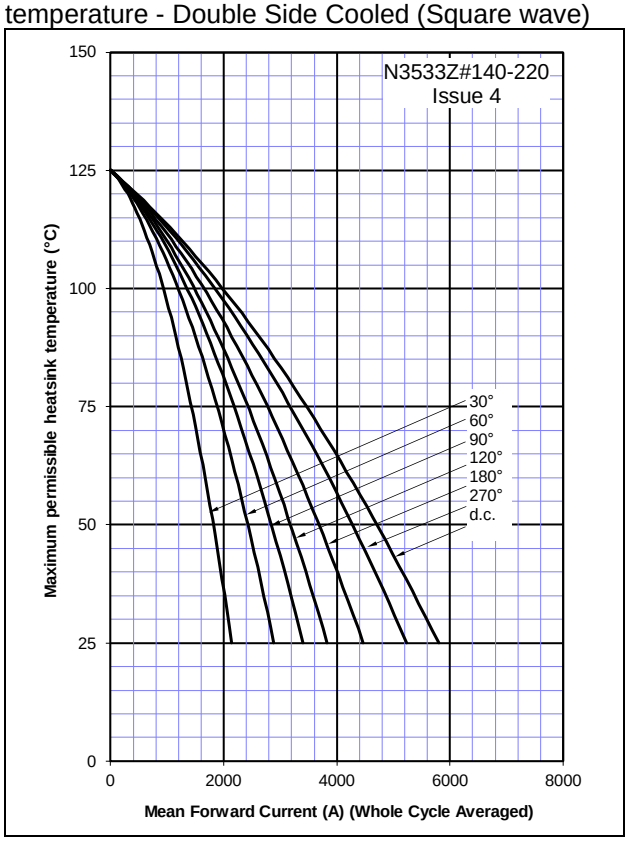

Figure 13 – On-state current vs. Power dissipation – Single Side Cooled (Sine wave)

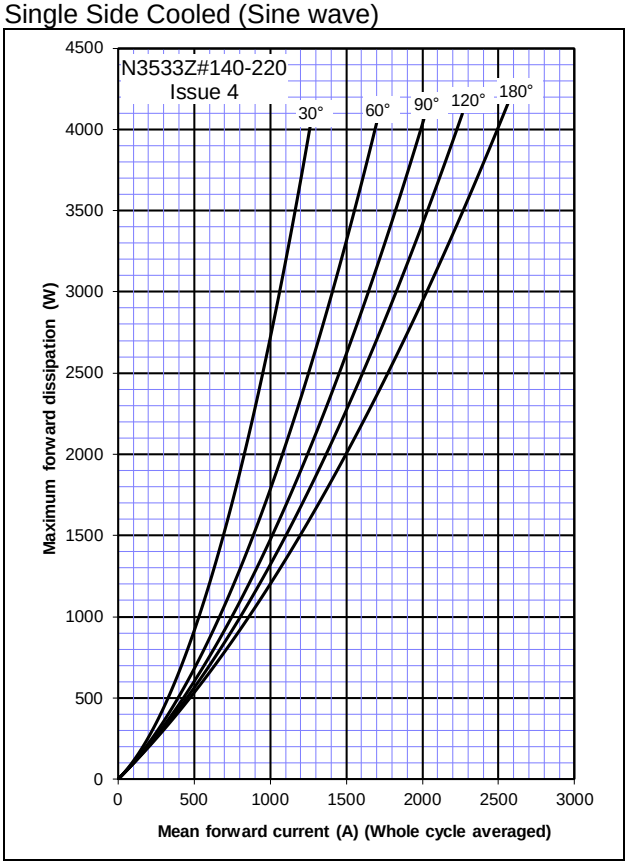

Figure 14 – On-state current vs. Heatsink temperature - Single Side Cooled (Sine wave)

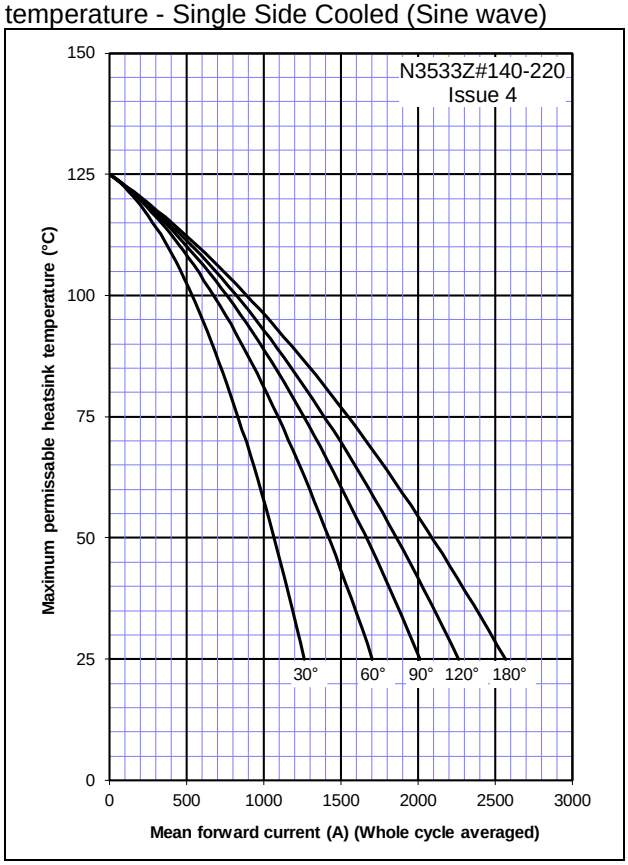

Figure 15 – On-state current vs. Power dissipation – Single Side Cooled (Square wave)

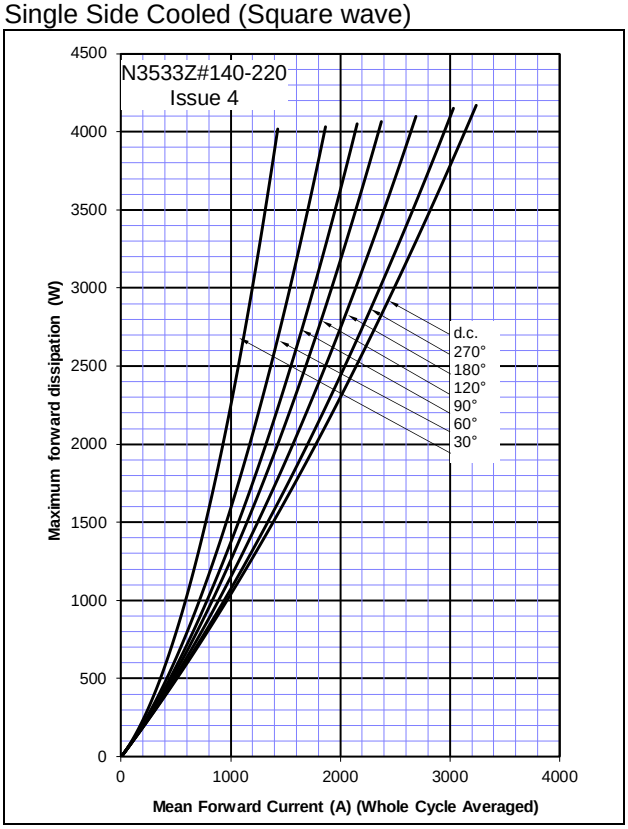

Figure 16 – On-state current vs. Heatsink temperature - Single Side Cooled (Square wave)

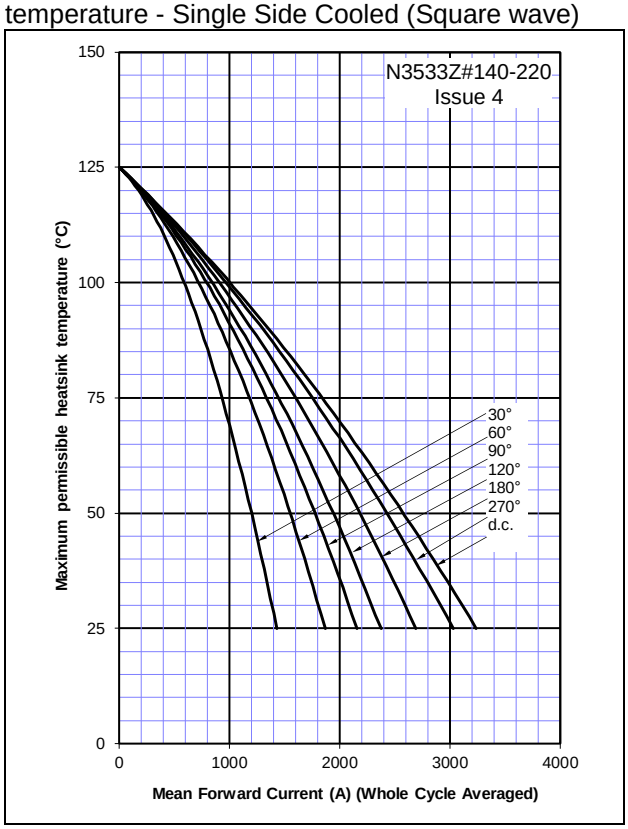

Figure 17 – Maximum surge and I²t Ratings

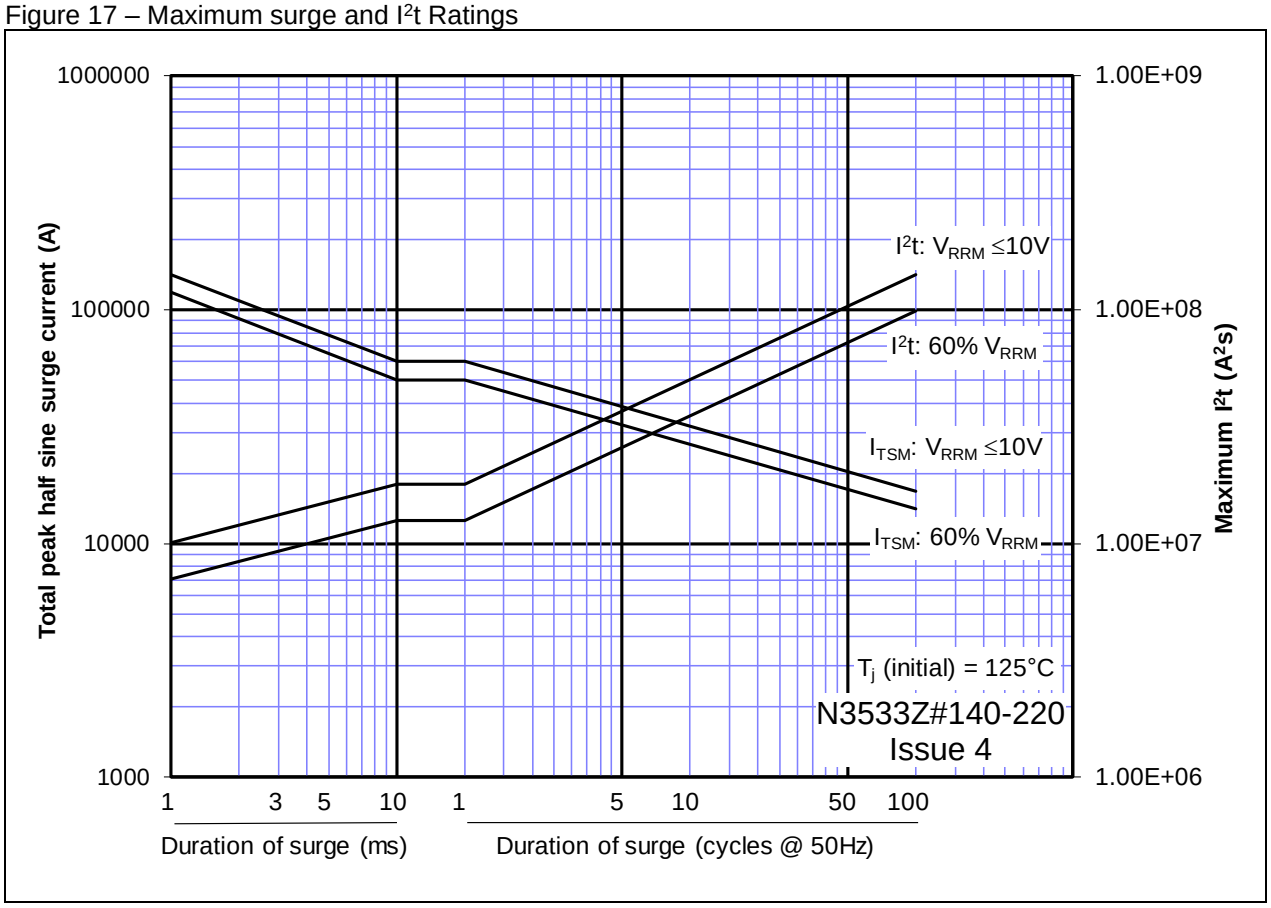

Outline Drawing & Ordering Information

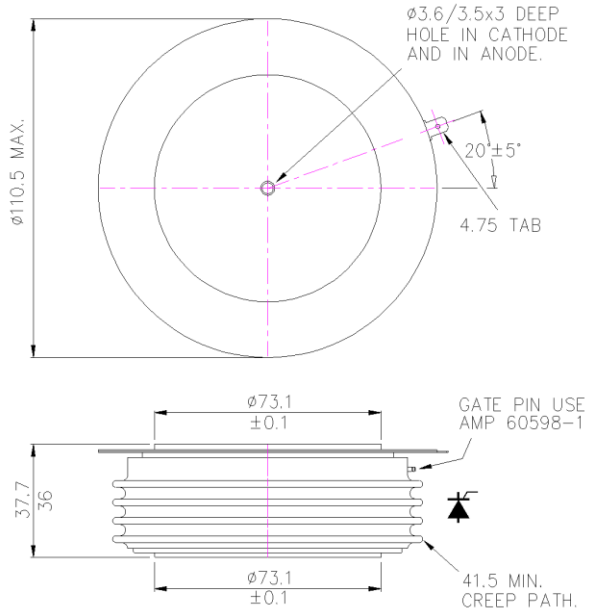

101A281

Outline option ZC and ZT

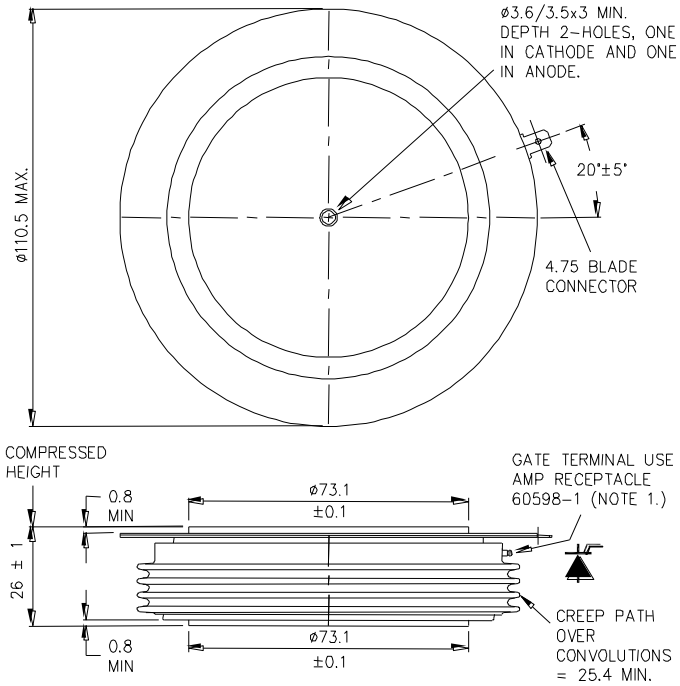

101A305

Outline option ZD and ZV

ORDERING INFORMATION (Please quote 10 digit code as below)

N3533	Z#	♦♦	0
Fixed Type Code	Outline code ZC = 37.7mm clamp height, ZT = 37.7mm clamp height, rupture rated ZD = 26mm clamp height, ZV = 26mm clamp height, rupture rated	Voltage code V_{DRM}/100 14-22	Fixed turn-off time code

Order code: N3533ZD220 – 2200V V_{RRM}, 26mm clamp height capsule.

IXYS Long Beach
IXYS Long Beach, Inc
2500 Mira Mar Ave, Long Beach
CA 90815
Tel: +1 (562) 296 6584
Fax: +1 (562) 296 6585
E-mail: service@ixyslongbeach.com

IXYS UK Westcode Ltd Langley Park Way,
Langley Park,
Chippenham,
Wiltshire,
SN15 1GE.
Tel: +44 (0)1249 444524
https://www.littelfuse.com/contactus.aspx

www.littelfuse.com

www.littelfuse.com/products/power-semiconductors/high-power

The information contained herein is confidential and is protected by Copyright. The information may not be used or disclosed except with the written permission of and in the manner permitted by the proprietors IXYS UK Westcode Ltd.

© IXYS UK Westcode Ltd.

In the interest of product improvement, IXYS UK Westcode Ltd reserves the right to change specifications at any time without prior notice.

Devices with a suffix code (2-letter, 3-letter or letter/digit/letter combination) added to their generic code are not necessarily subject to the conditions and limits contained in this report.

Disclaimer Notice – Information furnished is believed to be accurate and reliable. However, users should independently evaluate the suitability of and test each product selected for their own applications. Littelfuse products are not designed for, and may not be used in, all applications. Read complete Disclaimer Notice at www.littelfuse.com/disclaimer-electronics.