IXYS UK WESTCODE

Date:- 27 Nov, 2014

Data Sheet Issue:- 2

Soft Recovery Diode

Type M0280S/R#200 to M0280S/R#250

Absolute Maximum Ratings

	VOLTAGE RATINGS	MAXIMUM LIMITS	UNITS
V_{RRM}	Repetitive peak reverse voltage, (note 1)	2000-2500	V
V_{RSM}	Non-repetitive peak reverse voltage, (note 1)	2100-2600	V

	OTHER RATINGS	MAXIMUM LIMITS	UNITS
$I_{F(AV)M}$	Maximum average forward current, T_{sink}=55°C, (note 2)	280	A
$I_{F(AV)M}$	Maximum average forward current. T_{sink}=100°C, (note 2)	123	A
$I_{F(RMS)}$	Nominal RMS forward current, T_{sink}=25°C, (note 2)	573	A
$I_{F(d.c.)}$	D.C. forward current, T_{sink}=25°C, (note 3)	453	A
I_{FSM}	Peak non-repetitive surge t_p=10ms, V_{RM}=60%V_{RRM}, (note 3)	4500	A
I_{FSM2}	Peak non-repetitive surge t_p=10ms, V_{RM}≤10V, (note 3)	4950	A
I^2t	I^2t capacity for fusing t_p=10ms, V_{RM}=60%V_{RRM}, (note 3)	100×10^3	A^2s
I^2t	I^2t capacity for fusing t_p=10ms, V_{RM}≤10V, (note 3)	123×10^3	A^2s
$T_{j\,op}$	Operating temperature range	-40 to +125	°C
T_{stg}	Storage temperature range	-40 to +150	°C

Notes:-
1) De-rating factor of 0.13% per °C is applicable for T_j below 25°C.
2) single phase; 50Hz, 180° half-sinewave.
3) Half-sinewave, 125°C T_j initial.

Characteristics

	PARAMETER	MIN.	TYP.	MAX.	TEST CONDITIONS (Note 1)	UNITS
V_{FM}	Maximum peak forward voltage	-	-	1.71	I_{FM}=470A	V
V_{T0}	Threshold voltage	-	-	1.28		V
r_T	Slope resistance	-	-	0.92		mΩ
V_{FRM}	Maximum forward recovery voltage	-	51	-	di/dt = 400A/µs	V
I_{RRM}	Peak reverse current	-	-	20	Rated V_{RRM}	mA
Q_{rr}	Recovered charge	-	-	730	I_{FM}=1000A, t_p=200µs, di/dt=150A/µs, V_r=50V.	µC
Q_{ra}	Recovered charge, 50% chord	-	-	342		µC
I_{rm}	Reverse recovery current	-	-	265		A
t_{rr}	Reverse recovery time	-	2.8	-		µs
R_{thJC}	Thermal resistance, junction to case	-	-	0.13		K/W
T	Mounting torque	24.5	-	27		Nm
W_t	Weight	-	220	-	S/RJ housing option	g
		-	250	-	S/RC housing option	

Notes:-
1) Unless otherwise indicated T_j=125°C.

Notes on Ratings and Characteristics

1.0 Voltage Grade Table

Voltage Grade	V_{RRM} (V)	V_{RSM} (V)	V_R dc (V)
20	2000	2100	1250
25	2500	2600	1500

2.0 De-rating Factor

A blocking voltage de-rating factor of 0.13% per °C is applicable to this device for T_j below 25°C.

3.0 ABCD Constants

These constants (applicable only over current range of V_F characteristic in Figure 1) are the coefficients of the expression for the forward characteristic given below:

$$V_F = A + B \cdot \ln(I_F) + C \cdot I_F + D \cdot \sqrt{I_F}$$

where I_F = instantaneous forward current.

4.0 Reverse recovery ratings

(i) Q_{ra} is based on 50% I_{rm} chord as shown in Fig.(a) below.

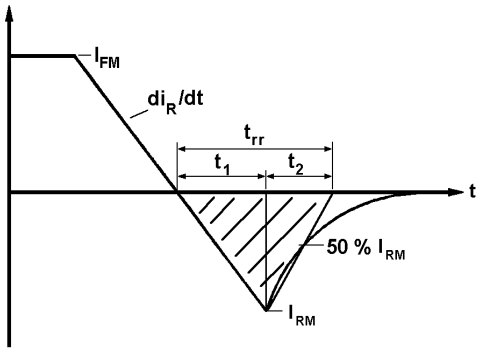

(ii) Q_{rr} is based on a 150µs integration time.

I.e.
$$Q_{rr} = \int_0^{150\mu s} i_{rr}.dt$$

(iii)
$$K\ Factor = \frac{t_1}{t_2}$$

5.0 Reverse Recovery Loss

The following procedure is recommended for use where it is necessary to include reverse recovery loss.

From waveforms of recovery current obtained from a high frequency shunt (see Note 1) and reverse voltage present during recovery, an instantaneous reverse recovery loss waveform must be constructed. Let the area under this waveform be E joules per pulse. A new sink temperature can then be evaluated from:

$$T_{SINK} = T_{J(MAX)} - E \cdot \left[k + f \cdot R_{thJK} \right]$$

Where k = 0.2314 (°C/W)/s

E = Area under reverse loss waveform per pulse in joules (W.s.)
f = Rated frequency in Hz at the original sink temperature.
R_{thJK} = d.c. thermal resistance (°C/W)

The total dissipation is now given by:

$$W_{(tot)} = W_{(original)} + E \cdot f$$

NOTE 1 - Reverse Recovery Loss by Measurement

This device has a low reverse recovered charge and peak reverse recovery current. When measuring the charge, care must be taken to ensure that:

(a) AC coupled devices such as current transformers are not affected by prior passage of high amplitude forward current.

(b) A suitable, polarised, clipping circuit must be connected to the input of the measuring oscilloscope to avoid overloading the internal amplifiers by the relatively high amplitude forward current signal.

(c) Measurement of reverse recovery waveform should be carried out with an appropriate critically damped snubber, connected across diode anode to cathode. The formula used for the calculation of this snubber is shown below:

$$R^2 = 4 \cdot \frac{V_r}{C_S \cdot {}^{di}/_{dt}}$$

Where: V_r = Commutating source voltage
C_S = Snubber capacitance
R = Snubber resistance

6.0 Snubber Components

When selecting snubber components, care must be taken not to use excessively large values of snubber capacitor or excessively small values of snubber resistor. Such excessive component values may lead to device damage due to the large resultant values of snubber discharge current. If required, please consult the factory for assistance.

7.0 Computer Modelling Parameters

7.1 Device Dissipation Calculations

$$I_{AV} = \frac{-V_{T0} + \sqrt{V_{T0} + 4 \cdot ff^2 \cdot r_T \cdot W_{AV}}}{2 \cdot ff^2 \cdot r_T}$$

Where V_{T0} =1.28V, r_T = 0.92mΩ

ff = form factor (normally unity for fast diode applications)

$$W_{AV} = \frac{\Delta T}{R_{th}}$$

$$\Delta T = T_{j(MAX)} - T_K$$

7.2 Calculation of V_F using ABCD Coefficients

The forward characteristic I_F Vs V_F, on page 6 is represented in two ways;

(i) the well established V_{T0} and r_T tangent used for rating purposes and

(ii) a set of constants A, B, C, and D forming the coefficients of the representative equation for V_F in terms of I_F given below:

$$V_F = A + B \cdot \ln(I_F) + C \cdot I_F + D \cdot \sqrt{I_F}$$

The constants, derived by curve fitting software, are given in this report for both hot and cold characteristics. The resulting values for V_F agree with the true device characteristic over a current range, which is limited to that plotted.

	125°C Coefficients
A	0.1805148
B	0.2223172
C	0.924871×10^{-3}
D	-0.01399568

Curves

Figure 1 – Forward characteristics of Limit device

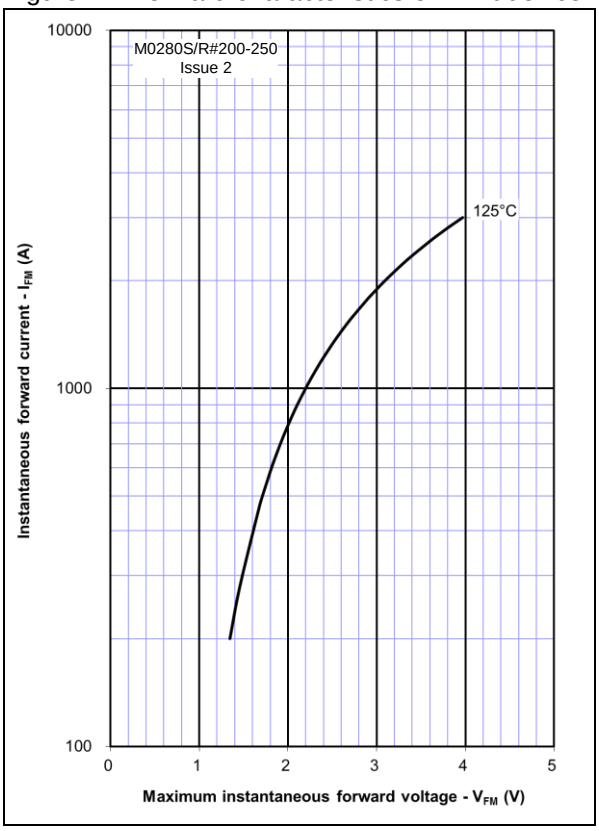

Figure 2 – Maximum recovered charge, Q_{rr}

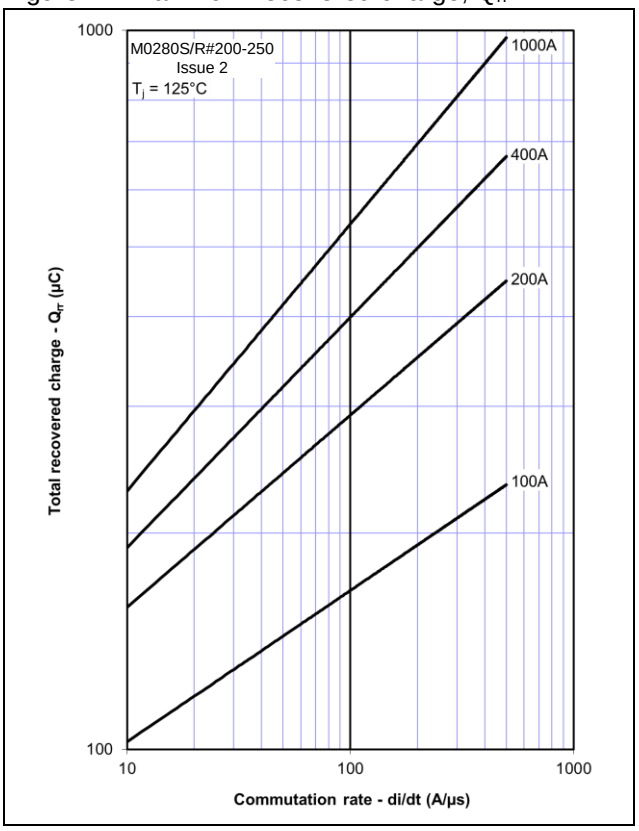

Figure 3 – Maximum recovered charge, Q_{ra} (50% chord)

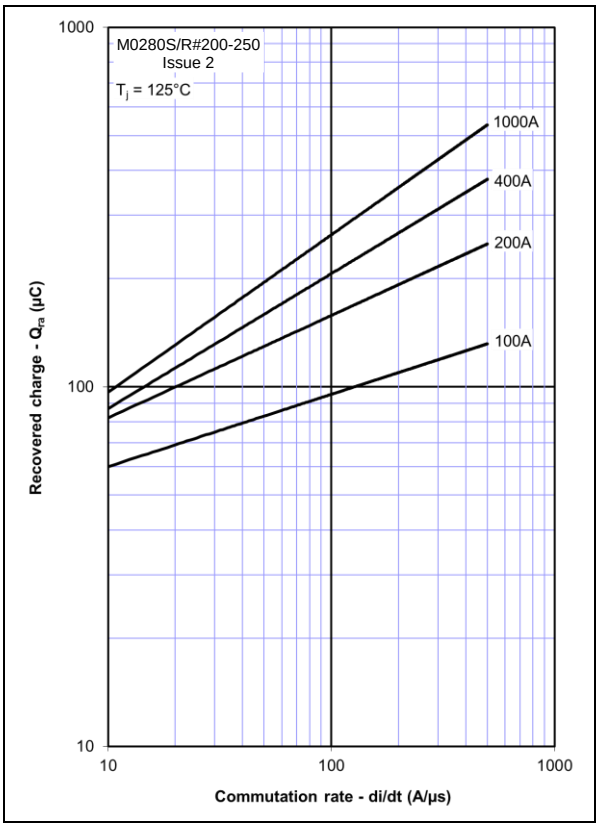

Figure 4 – Maximum reverse recovery current, I_{rm}

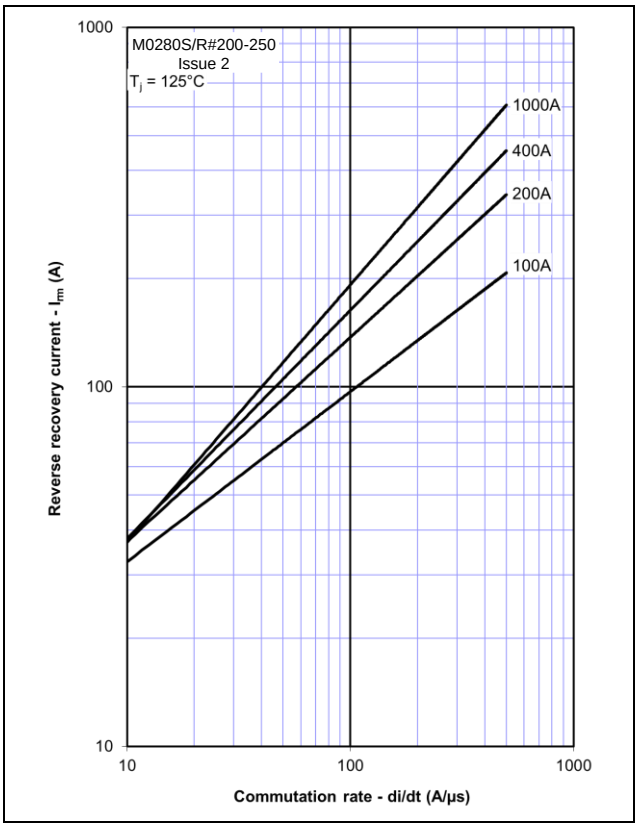

Figure 5 - Reverse recovery energy per pulse

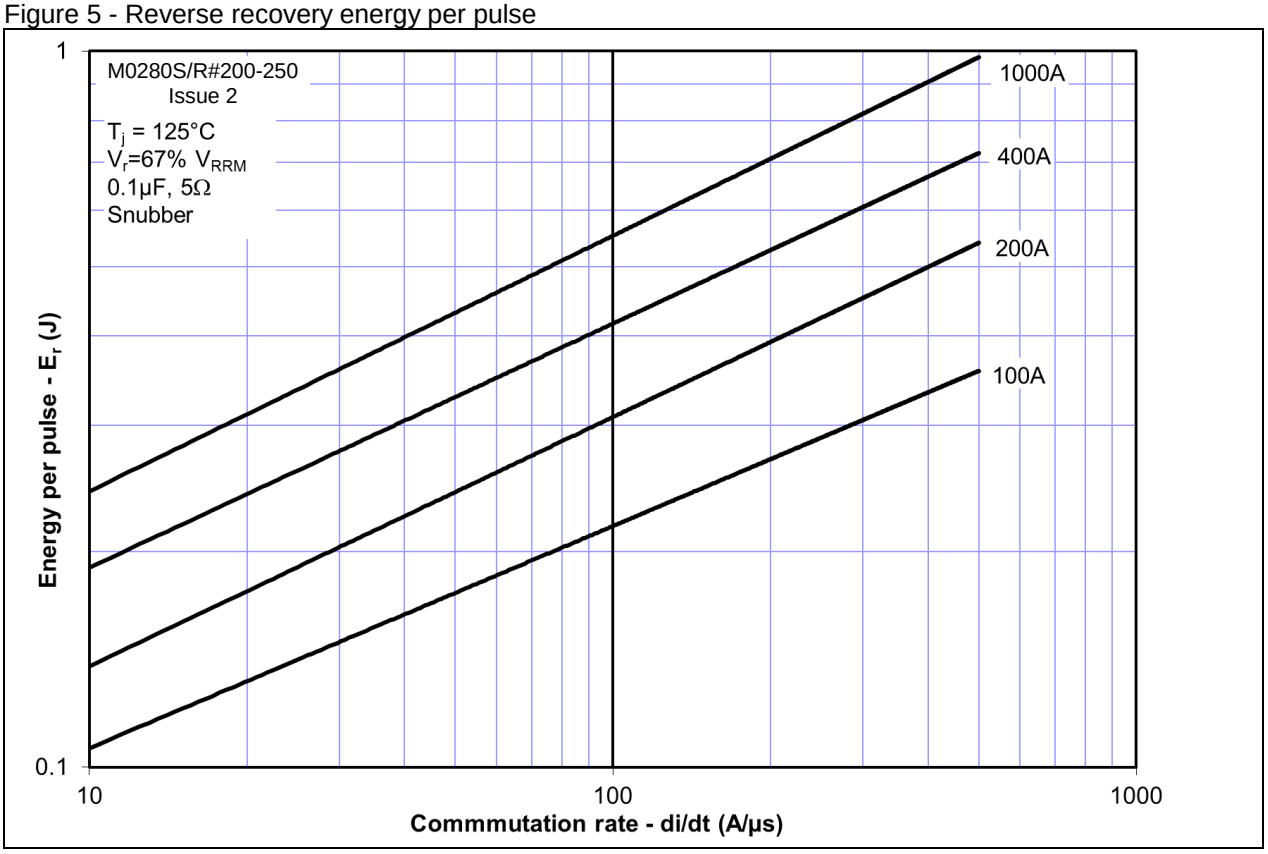

Figure 6 – Forward recovery voltage

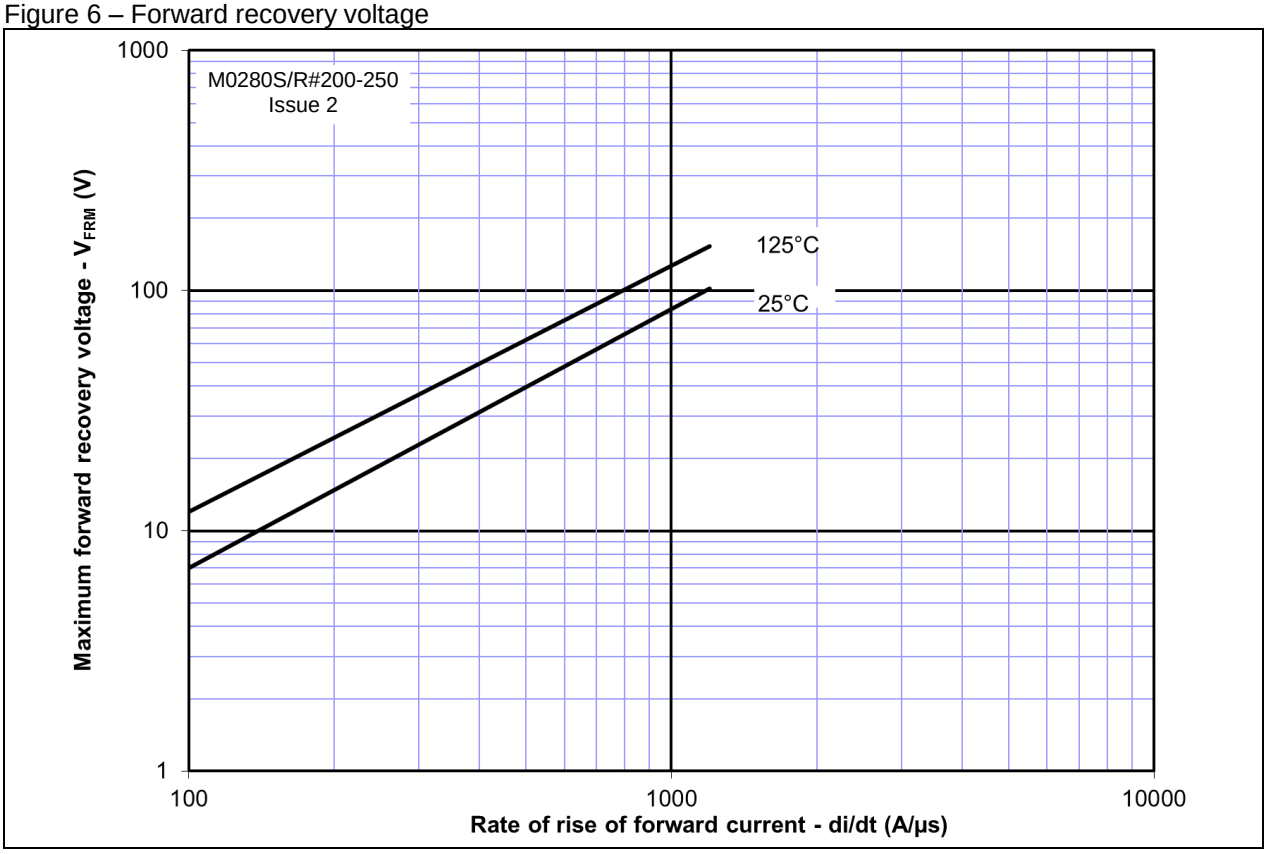

Figure 7 – Maximum surge and I²t ratings

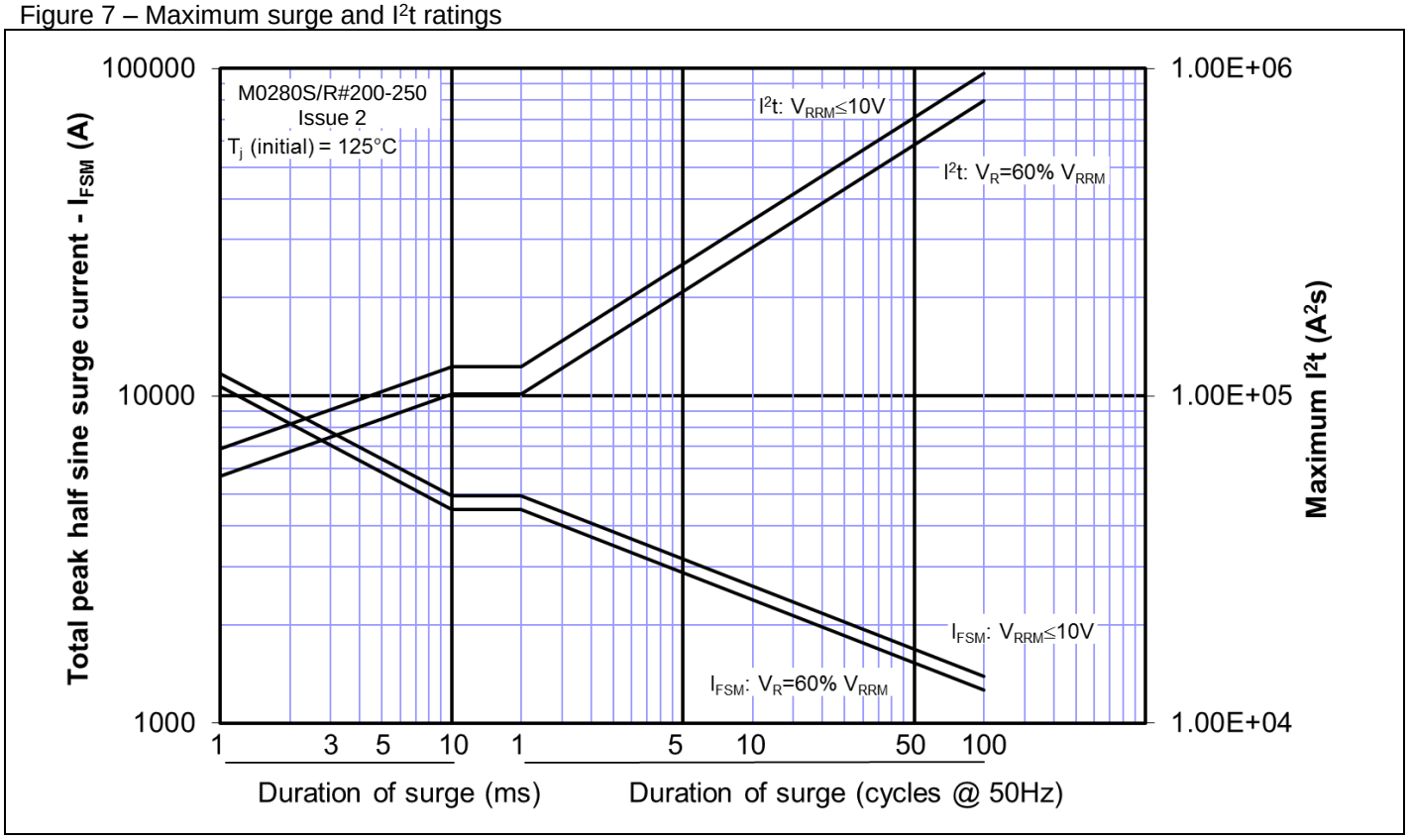

Figure 8 – Transient thermal impedance

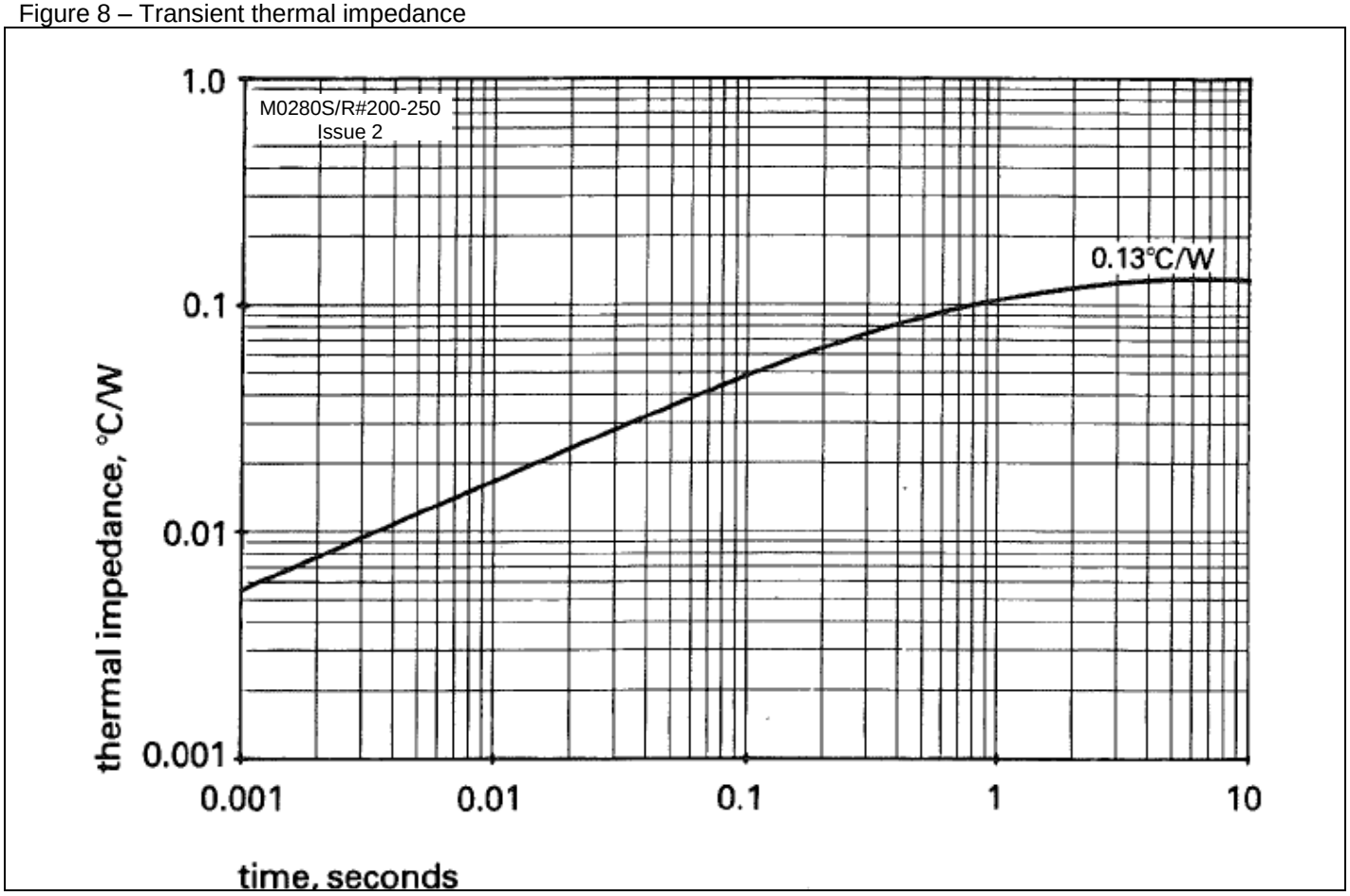

Outline Drawing & Ordering Information

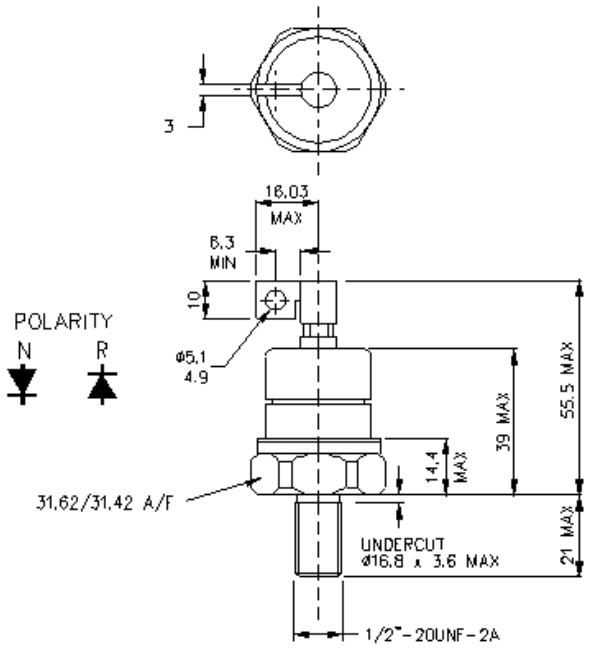

W22 – 100A297 (S/RJ)

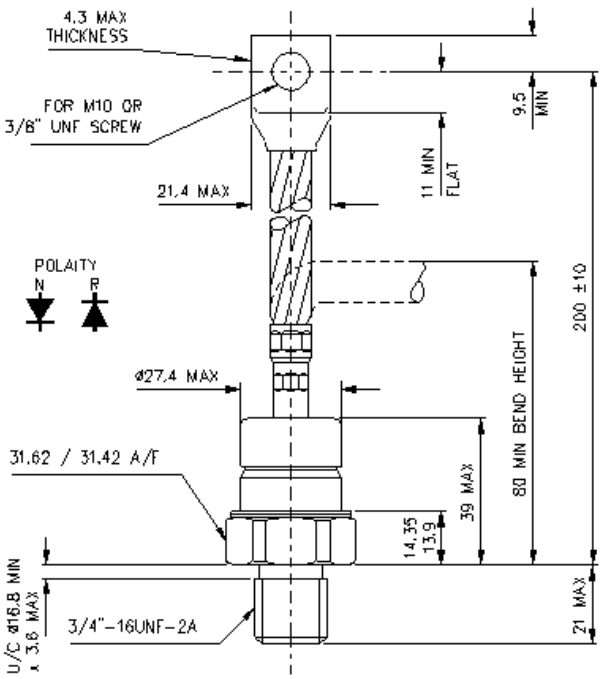

W24 – 100A280 (S/RC)

ORDERING INFORMATION (Please quote 10 digit code as below)

M0280	S/R	#	♦♦	0
Fixed Type Code	Polarity S – Cathode stud R – Anode stud	Fixed outline code J – ½" ceramic stud with lug C – ¾" ceramic stud with lead	Voltage code V_{RRM}/100 20-25	Fixed code

Order code: M0280RJ200 – 2000V V_{RRM}, ½" stud base with lug, stud anode.

IXYS Semiconductor GmbH
Edisonstraße 15
D-68623 Lampertheim
Tel: +49 6206 503-0
Fax: +49 6206 503-627
E-mail: marcom@ixys.de

IXYS UK Westcode Ltd
Langley Park Way, Langley Park,
Chippenham, Wiltshire, SN15 1GE.
Tel: +44 (0)1249 444524
Fax: +44 (0)1249 659448
E-mail: sales@ixysuk.com

IXYS Corporation
1590 Buckeye Drive
Milpitas CA 95035-7418
Tel: +1 (408) 547 9000
Fax: +1 (408) 496 0670
E-mail: sales@ixys.net

www.ixysuk.com

www.ixys.com

IXYS Long Beach, Inc
IXYS Long Beach, Inc
2500 Mira Mar Ave, Long Beach
CA 90815
Tel: +1 (562) 296 6584
Fax: +1 (562) 296 6585
E-mail: service@ixyslongbeach.com

The information contained herein is confidential and is protected by Copyright. The information may not be used or disclosed except with the written permission of and in the manner permitted by the proprietors IXYS UK Westcode Ltd.

In the interest of product improvement, IXYS UK Westcode Ltd reserves the right to change specifications at any time without prior notice.

Devices with a suffix code (2-letter, 3-letter or letter/digit/letter combination) added to their generic code are not necessarily subject to the conditions and limits contained in this report.

© IXYS UK Westcode Ltd.

IXYS
A Littelfuse Technology

Disclaimer Notice - Information furnished is believed to be accurate and reliable. However, users should independently evaluate the suitability of and test each product selected for their own applications. Littelfuse products are not designed for, and may not be used in, all applications. Read complete Disclaimer Notice at www.littelfuse.com/disclaimer-electronics.