Littelfuse®
Expertise Applied | Answers Delivered

DLMU SERIES

Wiring Diagram

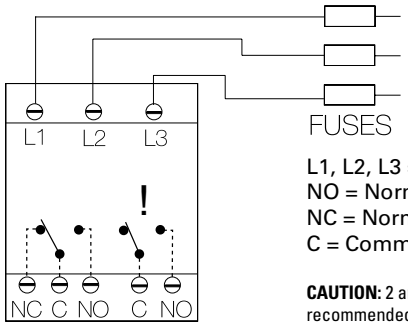

L1, L2, L3 = Line Voltage Input
NO = Normally Open Contact
NC = Normally Closed Contact
C = Common, Transfer Contact

CAUTION: 2 amp max. fast acting fuses are recommended to protect the equipment's wiring. They are not required to protect the DLMU.

! = Select alarm contact connection as N.O. or N.C. when ordering; N.O. Shown.

Features & Benefits

FEATURES	BENEFITS
Proprietary microcontroller based circuitry	Constant monitoring to protect against phase loss, phase reversal, over voltage, under voltage, unbalance, short cycling and over/under frequency
Universal line voltage range	Flexibility to work in 200 to 480VAC or 500 to 600VAC applications
DIN rail (35mm) or surface mounting	Installation flexibility
LED indication	Provides diagnostics of relay, fault and time delay status
User adjustable time delays	Prevents nuisance tripping and short cycling of sensitive equipment

Description

The DLMU Series is a universal voltage, 3-phase voltage monitor. It continuously measures the voltage of each of the three phases with microcontroller accuracy and compares the value to preset trip points. It separately senses phase reversal and loss; over, under and unbalanced voltages; and over or under frequency. Protection is assured during periods of large average voltage fluctuations or when regenerated voltages are present. The unit trips within 200ms when phase loss is detected. Adjustable time delays are included to prevent nuisance tripping and short cycling of sensitive equipment. The isolated, 10A, SPDT and 2A alarm output relay contacts trip when a phase voltage exceeds the trip limits for the trip delay. Nominal line voltage, voltage unbalance, and time delays are knob adjustable. The phase loss setpoint and the acceptable frequency range are fixed. Both delta and wye systems can be monitored; no connection to neutral is required.

Operation

Upon application of line voltage, the output is de-energized and the restart delay begins. If all the 3-phase voltages are within the acceptable range, the output energizes at the end of the restart delay. The microcontroller circuitry automatically senses the voltage range, and selects the correct operating frequency (50 or 60Hz). The over and undervoltage trip points are set automatically. When the measured value of any phase voltage exceeds the acceptable range limits (lower or upper) the trip delay begins. At the end of the trip delay the output relay de-energizes. If the phase voltage returns to an acceptable value before the trip delay expires, the trip delay is reset and the output remains energized. Under, over, and unbalanced voltages plus over or under frequency must be sensed for the complete trip delay before the unit trips. The unit trips in 200ms when phase loss or reversal are sensed. The unit will not energize if a fault is sensed as the line voltage is applied.

Reset: Reset is automatic upon correction of the voltage or frequency fault or phase sequence.

Ordering Information

MODEL	LINE VOLTAGE	OUTPUT	RESTART FUNCTION	VOLTAGE UNBALANCE	TRIP DELAY	RESTART DELAY
DLMHBRAAA	500 to 600VAC	SPDT & NO	Staggered restart	Adjustable 2 - 10%	Adjustable 1 - 30s	Adjustable 0.6 - 300S
DLMUBLAAA	200 to 480VAC	SPDT & NO	Lockout, min off time	Adjustable 2 - 10%	Adjustable 1 - 30s	Adjustable 0.6 - 300S
DLMUBNAAN	200 to 480VAC	SPDT & NO	No restart delay	Adjustable 2 - 10%	Adjustable 1 - 30s	None
DLMUBRAAA	200 to 480VAC	SPDT & NO	Staggered restart	Adjustable 2 - 10%	Adjustable 1 - 30s	Adjustable 0.6 - 300S

If you don't find the part you need, call us for a custom product 800-843-8848

© 2016 Littelfuse Protection Relays & Controls

DLMU SERIES

Restart Delay Options

L = Lockout or minimum OFF time. The restart delay begins when the output trips. The unit cannot be re-energized until the restart delay is complete. This provides a minimum off time or lockout time to allow equipment sensitive to short cycling, time to reset. If the fault is corrected after the restart delay is complete the output energizes immediately. The restart delay also occurs when line voltage is applied/reapplied.

R = Restart Delay on fault correction. The restart delay begins when line voltage is reapplied or when a voltage fault is corrected. This option is normally selected when staggered restarting of multiple motors on a power system is required.

N = No Restart Delay. 0.6 second initialization delay on application of line voltage applies.

Restart Notes: All restart options remain reset when the following conditions are detected:

1. Phase loss (phase unbalance greater than 25%)
2. Average line voltage less than 120VAC
3. Phase reversal

The restart delay begins when the condition is corrected.

LED Operation

The LED flashes green during the restart delay, then glows green when the output energizes. It flashes red during the trip delay then glows red when the output de-energizes. It flashes red/green if phase reversal is sensed. If a fault is sensed during the restart delay, the LED will glow red during that portion or the full restart delay.

Accessories

LPSM003ZXID (Indicating), LPSM003Z (Non-indicating) Fuse Holders
Littelfuse POWR-SAFE Dead Front holders provide optimum protection to personnel for Class CC and Midget-Style fuses. 600 VAC/DC

0KLK002.T Midget Fuse (2 Amp)
10 x 38 fast acting, high-interrupting capacity, current-limiting type fuse. 600 Vac/500 Vdc

C103PM (AL) DIN Rail
35 mm aluminum DIN rail available in a 36 in. (91.4 cm) length.

Specifications

Line Voltage

Type	3-phase delta or wye with no connection to neutral

Operating Voltage

	Range	Voltage Adj.Range	Line Frequency	Line Voltage Max.
200-480VAC	240	200-240VAC	50/60Hz	
	380	340-420VAC	50Hz	
	480	400-480VAC	60Hz	550VAC
600VAC	600	500-600VAC	50/60Hz	600VAC

AC Line Frequency	50/60 Hz automatically detected
Phase Loss	≥ 25% unbalance
Response Time	≤200ms

Undervoltage & Voltage Unbalance

Type	Voltage detection with delayed trip & automatic reset

Overvoltage

TripVoltage	109 - 113% of the adjusted line voltage
Reset Voltage	≅ -3% of the trip voltage

Undervoltage

Trip Voltage	88 - 92% of the adjusted line voltage
Reset Voltage	≅ +3% of the trip voltage
Voltage Unbalance	Adjustable 2 - 10% or specify fixed unbalance of 2 - 10% in 1% increments
Reset on balance	≅ -0.7% unbalance

Trip Delay

Active On	Over/undervoltage, voltage unbalance, over/under frequency
Range	Adjustable from 1 - 30s or specify fixed delay 1 - 30s in 1s increments
Tolerance	± 15%

Restart Delay

Range	Adjustable from 0.6 - 300s; if no restart delay is selected a 0.6s initialization delay applies
Tolerance	± 15%
Over/Under Frequency	±4%; Reset ±3%; 50/60 Hz
Phase Sequence	A, B, C, L1, L2, L3
Response Time -Phase Reversal & Phase Loss	≤200 ms
Reset	Automatic

Output

Type	Isolated Electromechanical Relay
Form C	Isolated, SPDT
Form C Rating	10A resistive @ 240VAC; 8A resistive @ 277VAC; NO-1/4 hp @ 120VAC; 1/3 hp @ 240VAC
Form A	Isolated, NO, SPST
Form A Rating	2A @ 277VAC
Life	Mechanical - 1 x 10^6; Electrical - 1 x 30^3

Protection

Phase Reversal/Failure	ASME A17.1 Rule 210.6
Motors and Generators	NEMA MG1 14:30, 14:35
Surge	IEEE C62.41-1991 Level B
Isolation Voltage	≥ 2500V RMS input to output

Mechanical

Mounting	Surface mount with 2 #8 (M4 x 0.7) screw or snap on 35mm DIN Rail *Note: 0.25 in.(6.35 mm) spacing between units or other devices is required*
Dimensions	**H** 110 mm (4.33"); **W** 75 mm (2.95"); **D** 50 mm (1.97")
Termination	Screw terminals with captive wire clamps for up to #14 AWG (2.5 mm^2) wire
Terminal Torque	4.4 in.-lbs.

Environmental

Operating/Storage Temperature	-40° to 60°C / -40° to 85°C
Humidity	95% relative, non-condensing
Weight	≅ 8.6 oz (244 g)

© 2016 Littelfuse Protection Relays & Controls