646 Series

Molded Base Fuse Block For 5×20mm Fuses

RoHS Pb

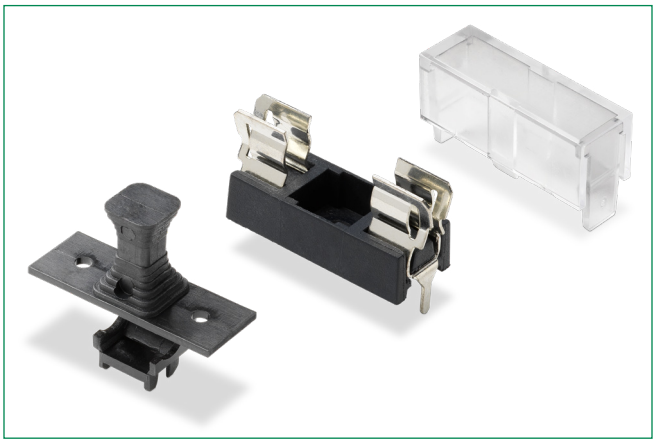

Product Characteristics

Compatible Fuse Sizes	**For 5×20mm Fuses**
Materials	**Holder:** Black Thermoplastic, UL94 V-0 Polyamide PA 6.6
	Cover: Transparent Thermoplastic, UL94 V-0, Polycarbonate PC
	Adapter: Polyester PBT, UL94 V-0
	Metal Parts: Tin plated Copper alloy
Electrical Data (23°C)	**Rated Voltage:** 250V
	Max. Current/Power: 6.3A/2.5W 5A/1W (with No. 648) 6.3A/1.6W (with No. 640)
Mounting	Solder pins 0.5mm×1.2mm Ø 3mm screw hole may be used optionally
Minimum Cross Section	Conducting path - 0.2mm^2
Unit Weight	1.6g (Holder), 1.0g (Cover), 1.0g (Adapter)

Note: If used with cover, refer to Fuseology for information on proper fuse block re-rating.

Additional Information

Resources | Accessories | Samples

Ordering Information

Ordering PN	Description	Pic	Meas. "A"	For PCB-Thickness
64600001003	Fuse Block	1	5mm	3mm
64600001223	Fuse Block	1	3.2mm	1.5mm
64600001233	Fuse Block	2	3.3mm	1.5mm

Ordering PN	Description	Fuse PN	Block PN
64612007113	Fuse & Block Assy.	0215002.MXP	6460001233
64612007123	Fuse & Block Assy.	0219002.MXAP	
64614007143	Fuse & Block Assy.	0218004.MXP	

Ordering PN	Description
64000001003	Adapter - Black
64000001403	Adapter - Brown
64000001503	Adapter - White
64000001603	Adapter - Yellow
64000001703	Adapter - Green
64000001903	Adapter - Blue
64800001009	Clear Cover

Dimensions

Pic 1

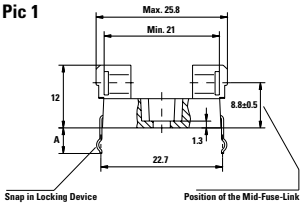

Pic 2

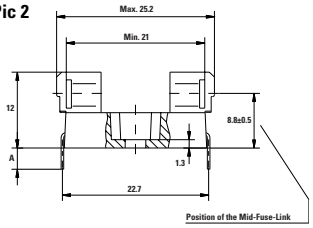

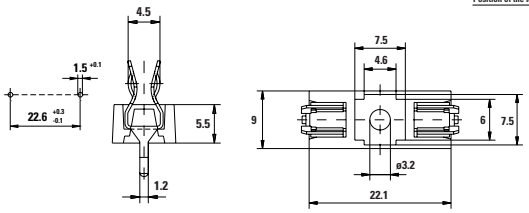

Recommended Hole Pattern

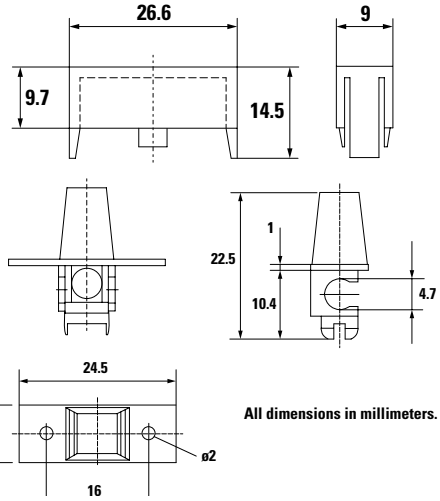

All dimensions in millimeters.

Note: 1.00 means the number one with two decimal places. 1,000 means the number one thousand. Contact Littelfuse for an auto-insertable fuse, holder and adapter assembly.

Disclaimer Notice - Information furnished is believed to be accurate and reliable. However, users should independently evaluate the suitability of and test each product selected for their own applications. Littelfuse products are not designed for, and may not be used in, all applications. Read complete Disclaimer Notice at: www.littelfuse.com/disclaimer-electronics.

© 2022 Littelfuse, Inc.
Specifications are subject to change without notice.
Revised: GD. 08/16/22