Littelfuse
Expertise Applied | Answers Delivered

KRDR SERIES

Description

The KRDR Series is a compact time-delay relay measuring only 2 in. (50.8 mm) square. Its solid-state timing circuit provides excellent repeat accuracy and stability. Encapsulation protects against shock, vibration, and humidity. The KRDR Series is a cost effective recycling timer for OEM applications that require small size, isolation, reliability, and long life.

Operation (Recycling - ON Time First)

Upon application of input voltage, the output relay energizes and the T2 ON time begins. At the end of the ON time, the output de-energizes and the T1 OFF time begins. At the end of the OFF time, the output relay energizes and the cycle repeats as long as input voltage is applied

Reset: Removing input voltage resets the output and the time delays, and returns the sequence to the ON time.

Operation (Recycling - OFF Time First)

Upon application of input voltage, the T1 OFF time begins. At the end of the OFF time, the T2 ON time begins and the load energizes. At the end of the ON time the load de-energizes, and the cycle repeats until input voltage is removed.

Reset: Removing input voltage resets the output and the sequence to the OFF time.

Wiring Diagram

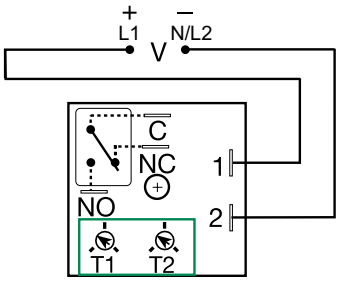

V = Voltage
C = Common
NO = Normally Open
NC = Normally Closed
T1 = OFF Time
T2 = ON Time

A knob is supplied for adjustable units.

Features & Benefits

FEATURES	BENEFITS
Compact design and independent adjustment of ON and OFF times	Provides greater flexibility for OEM applications and reduces component and labor costs
Microcontroller based	Repeat Accuracy + / - 0.5%, Factory calibration + / - 5%
Isolated, 10A, SPDT output contacts	Allows control of loads for AC or DC voltages
Encapsulated	Protects against shock, vibration, and humidity

Ordering Information

MODEL	INPUT VOLT.	ADJUST.	T2 ON TIME	FIRST DELAY	T1 OFF TIME
KRDR115MB25M	12VDC	Fixed	5m	Off time	25m
KRDR120A0	12VDC	Adjustable	0.1 - 10s	On time	0.1 - 10s
KRDR121A1	12VDC	Adjustable	1 - 100s	On time	1 - 100s
KRDR320B0	24VDC	Adjustable	0.1 - 10s	Off time	0.1 - 10s
KRDR321A4	24VDC	Adjustable	1 - 100s	On time	1 - 100m
KRDR321B4	24VDC	Adjustable	1 - 100s	Off time	1 - 100m
KRDR420A3	120VAC	Adjustable	0.1 - 10s	On time	0.1 - 10m
KRDR421A4	120VAC	Adjustable	1 - 100s	On time	1 - 100m
KRDR424A0	120VAC	Adjustable	1 - 100m	On time	0.1 - 10s
KRDR424A4	120VAC	Adjustable	1 - 100m	On time	1 - 100m
KRDR440.5SA0	120VAC	On time fixed	0.5s	On time	0.1 - 10s

If you don't find the part you need, call us for a custom product 800-843-8848

Accessories

P1023-6 Mounting bracket
The 90° orientation of mounting slots makes installation/removal of modules quick and easy.

P1015-13 (AWG 10/12), **P1015-64** (AWG 14/16) **Female Quick Connect**
These 0.25 in. (6.35 mm) female terminals are constructed with an insulator barrel to provide strain relief.

P1015-18 Quick Connect to Screw Adapter
Screw adapter terminal designed for use with all modules with 0.25 in. (6.35 mm) male quick connect terminals.

C103PM (AL) DIN Rail
35 mm aluminum DIN rail available in a 36 in. (91.4 cm) length.

P1023-20 DIN Rail Adapter
Allows module to be mounted on a 35 mm DIN type rail with two #10 screws.

© 2016 Littelfuse Protection Relays & Controls

Littelfuse
Expertise Applied | Answers Delivered

KRDR SERIES

Output Current/Ambient Temperature

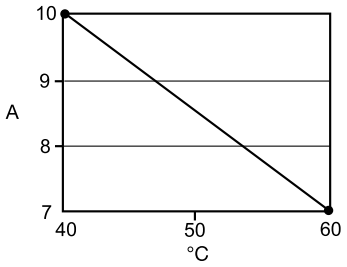

Function Diagrams

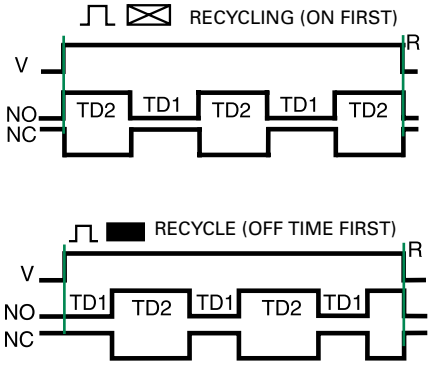

V = Voltage
NO = Normally Open Contact
NC = Normally Closed Contact
T1 = OFF Time
T2 = ON Time
R = Reset

Specifications

Time Delay	
Range	0.1s - 1000m in 6 adjustable ranges or fixed
Repeat Accuracy	±0.5 % or 20ms, whichever is greater
Tolerance (Factory Calibration)	≤ ±5%
Reset Time	≤ 150ms
Time Delay vs Temp. & Voltage	≤ ±5%
Input	
Voltage	12, 24 or 110VDC; 24, 120 or 230VAC
Tolerance	
12VDC & 24VDC/AC	-15% - 20%
110VDC & 120 or 230VAC	-20% - 10%
AC Line Frequency/DC Ripple	50/60 Hz / ≤ 10%
Power Consumption	AC ≤ 2VA; DC ≤ 2W
Output	
Type	Isolated relay contacts
Form	SPDT
Rating (at 40°C)	10A resistive @ 125VAC; 5A resistive @ 230VAC & 28VDC; 1/4 hp @ 125VAC
Max. Switching Voltage	250VAC
Life (Operations)	Mechanical - 1 x 10^7; Electrical - 1 x 10^5
Protection	
Circuitry	Encapsulated
Isolation Voltage	≥ 1500V RMS input to output
Insulation Resistance	≥ 100 MΩ
Polarity	DC units are reverse polarity protected
Mechanical	
Mounting	Surface mount with one #10 (M5 x 0.8) screw
Dimensions	**H** 50.8 mm (2”); **W** 50.8 mm (2”); **D** 30.7 mm (1.21”)
Termination	0.25 in. (6.35 mm) male quick connect terminals
Environmental	
Operating/Storage Temperature	-20° to 60°C / -40° to 85°C
Humidity	95% relative, non-condensing
Weight	≅ 2.6 oz (74 g)

© 2016 Littelfuse Protection Relays & Controls